LAFERTGROUP
Member of Sumitomo Drive Technologies

ASYNCHRONOUS MOTORS

THREE-PHASE MOTORS
SINGLE-PHASE MOTORS
BRAKE MOTORS

CATALOGUE 2024

IE2 IE3 IE4

Evolving from Lafert to Lafert

Endless integrated solutions

Since inception we have overseen strategic positions and evolved together with the markets. We have led the way in the world of energy efficiency and environmental sustainability. We have always been, and still are, the market leader of product customisation.

"From Lafert to Lafert" represents the evolution that confirms the desire to progress in the wake of our company history which has always resulted in absolute quality.
Now we target an innovative but solid route to give you just what you need, with the flexibility of integrated solutions. This means better understanding the needs of a continually changing market and consequently building a clear path for the future.

For these reasons we are member of the large international industry group Sumitomo Drive Technologies.

LAFERTGROUP
Member of Sumitomo Drive Technologies

Evolving from Lafert to Lafert

Our watchword is "evolution", because we face new challenges every day with a clear vision for constant improvement.

Through company choices, inhouse skills and market demands, we have always been committed to technological innovation that matures over time.

Lafert Group, with 60 years of experience and our partnerships with international players, represents innovation that evolves, does not stop, and continues to adapt "**endless integrated solutions**".

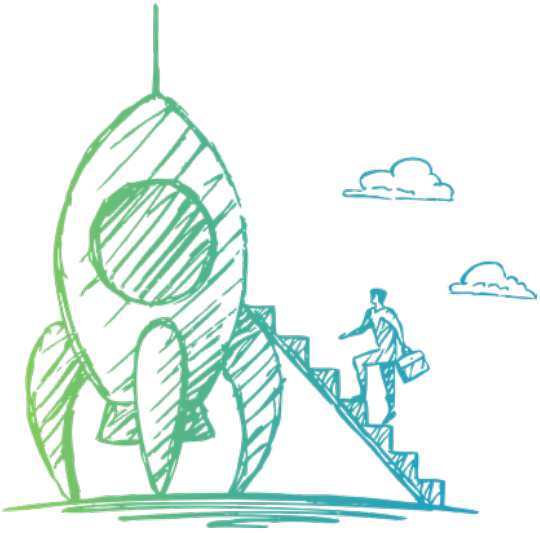

Whatever we do we think big

We are European leaders in the designing and manufacturing of customized electric motors and drives used primarily in the fields of industrial automation, energy saving and renewables.

Each individual company of our group contributes to the success of the organization through their specialized strength in design and production. The combined knowledge of the organization supports the continuous research and development of innovative technologies.

It is a great responsibility that we assume for the world and future generations, an awareness that allows us to understand the future, to think big, and to anticipate the next global needs to **achieve a more efficient and sustainable world.**

225 M€
Sales 2023

1.100
Employees 2023

+77%
Growth
2013-2023

5%
Investments 2024
on BDG

+94%
Growth
2013-2023

over 1 M
Motors Production
2023

51.000m²
Manufacturing Area

The key is technological development

Evolution requires technological development, testing ourselves with global challenges and striving to achieve new energy standards. Since our establishment, we have constantly valued research and development. Thanks to our flexible design and production capabilities, we are able to quickly respond to the global market with new ideas.

The endless future applications of our products ensure that Lafert Group will always evolve and adapt with time. This can be demonstrated by the introduction of permanent magnet technologies, the creation of highly efficient IE4 and IE5 products and the integration between electromechanical technologies.

Our focus on technological innovation is the key to achieving **greater efficiency performance in variable speeds, maximum energy savings and a compact design.**

Our global presence

We offer the highest flexibility in design and operate across **thirteen locations in Europe, North America, Asia and Australia.** Our 6 production units work closely to coordinate the integration of production processes. This allows us to offer customized technological solutions to meet market demands.

Since 2018 we have been member of the large international group **Sumitomo**. Thanks to the ambitious investment plan, organizational strengthening, and complementary internal production capabilities, many business opportunities have already developed and will continue to grow in the near future.

We have created a powerful claim, a statement that sets a long-term goal and represents the ideal to which we aim to.

Shaping the future together

Sumitomo Drive Technologies
LAFERTGROUP
Invertek Drives.com

RANGE OF PRODUCTS
(2023)

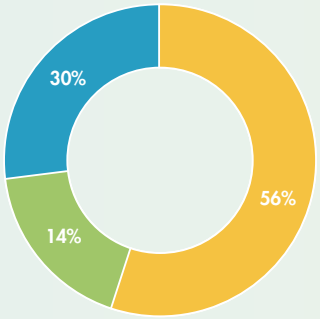

- ASYNCHRONOUS MOTORS
- SYNCHRONOUS MOTORS & DRIVES
- BRUSHLESS SERVO MOTORS & DRIVES

FIELDS OF APPLICATION
(2023)

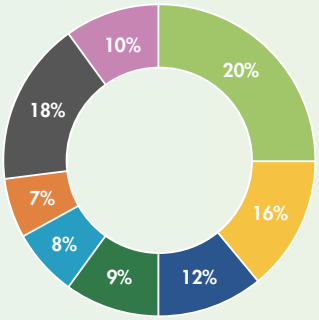

- HVAC/R
- AIR TECHNOLOGY
- INDUSTRIAL MACHINERY
- ROBOTICS
- WIND ENERGY
- MATERIAL HANDLING / AGV
- SYSTEMS INTEGRATORS
- DISTRIBUTION

BUSINESS PRESENCE
(2023)

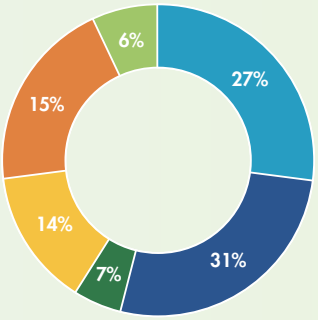

- ITALY
- GERMAN SPEAKING COUNTRIES
- SCANDINAVIAN COUNTRIES
- REST OF EUROPE
- NORTH AMERICA
- REST OF THE WORLD

CONTENTS

GENERAL INFORMATION 3
STANDARDS AND REGULATIONS 4
CONDITION OF INSTALLATION 11
TOLERANCES 12
MECHANICAL DESIGN 13
Degrees of protection
Mounting arrangements
Materials and painting
Bearings
Optional features
Cooling, vibration and noise
ELECTRICAL DESIGN 22
Rated voltage, frequency and current
Insulation and temperature rise
Starting rate
Thermal protection
Connection
Encoder
ORDER DATA 28

THREE-PHASE MOTORS 31
TERMINAL BOX 32
CONNECTION DIAGRAMS 34
FREQUENCY CONVERTER 36
SPARE PARTS 37
TYPE DESIGNATION 38
PERFORMANCE DATA 39
Super Premium Efficiency Motors – IE4
Premium Efficiency Motors – IE3
High Efficiency Motors – IE2
Standard Efficiency Motors – IE1
Two speed Motors
DIMENSIONS 58

SINGLE-PHASE MOTORS 73
TERMINAL BOX 74
CONNECTION DIAGRAMS 76
ELECTRONIC STARTING DEVICE 78
SPARE PARTS 79
TYPE DESIGNATION 80
PERFORMANCE DATA 81
High Efficiency Motors – IE2
Standard Motors
Motors with starting capacitor
Dual voltage motors
Dual voltage motors with starting capacitor
DIMENSIONS 87

BRAKE MOTORS 91
TECHNICAL DESCRIPTION AND SPARE PARTS 92
Motors with high torque DC brake
Motors with high torque AC brake
Motors with low torque DC brake
CONNECTION DIAGRAMS 98
TYPE DESIGNATION 101
PERFORMANCE DATA 102
Premium Efficiency Motors – IE3
High Efficiency Motors – IE2
Standard Efficiency Motors – IE1
DIMENSIONS 114

GENERAL INFORMATION

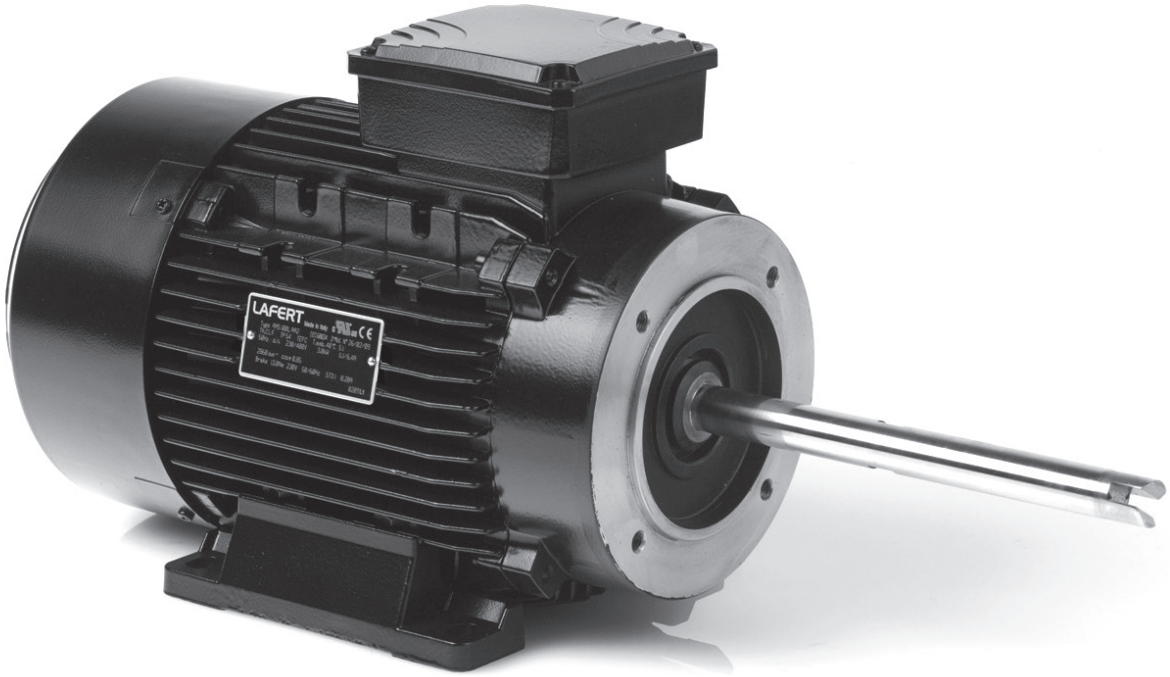

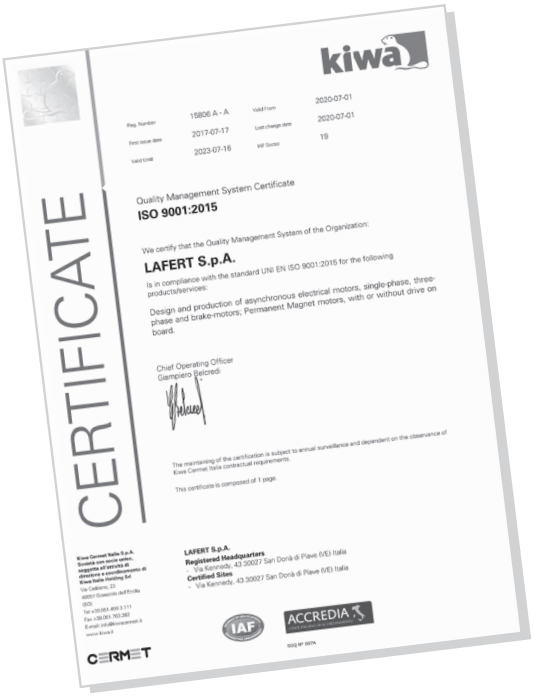
CERTIFICATE

kiwa

Reg. Number 15806 A - A
First issue date 2017-07-17
Valid Until 2023-07-16
Valid From 2020-07-01
Last change date 2020-07-01
IAF Sector 19

Quality Management System Certificate
ISO 9001:2015

We certify that the Quality Management System of the Organization:

LAFERT S.p.A.

Is in compliance with the standard UNI EN ISO 9001:2015 for the following products/services:

Design and production of asynchronous electrical motors, single-phase, three-phase and brake-motors; Permanent Magnet motors, with or without drive on board.

Chief Operating Officer
Giampiero Belardi

The maintaining of the certification is subject to annual surveillance and dependent on the observance of Kiwa Cermet Italia contractual requirements.

This certificate is composed of 1 page.

LAFERT S.p.A.
Registered Headquarters
- Via Kennedy, 43 30027 San Donà di Piave (VE) Italia
Certified Sites
- Via Kennedy, 43 30027 San Donà di Piave (VE) Italia

IAF
ACCREDIA

CERMET

QUALITY SYSTEM CERTIFICATE

The strictness of our quality control assures the flawless operation and reliability of our products. Our quality is confirmed by the **Certificate ISO 9001:2015** awarded by KIWA-CERMET, a certification body authorized by ACCREDIA.

SAFETY STANDARDS

Our motors comply with the requirements of the International Standard **IEC 60034** for rotating electrical machines as well as with the following European Directives: **Low Voltage Directive** (LV) 2014/35/EC, **Electromagnetic Compatibility Directive** (EMC) 2014/30/EC and **RoHS Directive** 2011/65/EC on the restriction of hazardous substances in electrical and electronic equipment.

All products comply with the requirements of the **Directive Machines** (MD) 2006/42/EC. In accordance with this Directive, induction motors are components and intended solely for integration into other machines. Commissioning is forbidden until conformity of the end-product with this Directive is proved.

CE The CE marking was applied for the first time in 1995.

When operating the motor, the observance of the Regulation EN 60204-1 and safety instructions indicated in our Operating Instructions must be complied with.

Motors complied with many other international standards are available on request:

c UL us Motors approved by UL Underwriters Laboratories Inc.

Motors approved by CSA

Motors approved by CQC (small motors)

EAC Motors approved by SERCONS (Russian Certification Authority in Europe)

UK CA Motors complied with all applicable UK legislative requirements (UK Conformity Assessed)

EFFICIENCY STANDARDS

IE1 IE2 IE3 IE4 Efficiencies harmonized to the **International Standard IEC 60034-30-1:2014** that states the efficiency levels: Standard Efficiency IE1, High Efficiency IE2, Premium Efficiency IE3 and Super Premium Efficiency IE4. The efficiency levels are in accordance with the testing method IEC 60034-2-1;2014.

CE Motors comply with applicable EU legislation (Ecodesign efficiency directive).

ENERGY c UL us Premium Efficiency motors according to **EISA** Directive. Verified by UL Underwriters Laboratories Inc.

Motors with **China Energy Label** (CEL).

GLOBAL MEPS

Electric motors have a significant impact on the worldwide energy consumption, accounting up to 50% of global energy consumption, and over in industrial application. Today in fact, the major factor influencing the motor industry is energy efficiency, driven by both increasingly demanding legislation and industry's greater awareness of green issue responsibilities.

Many Governments worldwide have imposed local Regulations, defining Minimum Energy Performance Standards (MEPS) to several types of electrical equipment, including electric motors. And the scope of these Regulations become even more stringent year by year. Regional standards, defining the efficiency levels and test methods to determine efficiencies, allow a standardization in the definition and measurement of efficiency amongst motor manufacturers, so simplifying the motors' selection.

Lafert embraces the challenge, offering a wide range of high efficiency motors in compliance with these minimum efficiency levels, whilst remaining committed to the research and development of innovative solutions with even higher efficiency levels.

INTERNATIONAL EFFICIENCY LEVELS: IE CODES

The International Standard **IEC 60034-30-1;2014** ensures a common base for electric motor designing and classification, as well as for national legislative activities, increasing the level of harmonization in **MEPS** (Minimum Energy Performance Standard) all over the world.

The IEC 60034-30-1 states the efficiency levels (IE codes) and requirements and provides test conditions and efficiency measurement methods specified in **IEC 60034-2-1;2014**. It doesn't state the minimum efficiency level (MEPS). This depends on any national legislative activities and government targets to save energy.

IE1	IE2	IE3	IE4
Standard Efficiency	High Efficiency	Premium Efficiency	Super-Premium Efficiency

EFFICIENCY VALUES FOR 50 HZ ACCORDING TO IEC 60034-30-1:2014

Output	IE1				IE2				IE3				IE4			
kW	2	4	6	8	2	4	6	8	2	4	6	8	2	4	6	8
0.12	45.0	50.0	38.3	31.0	53.6	59.1	50.6	39.8	60.8	64.8	57.7	50.7	66.5	69.8	64.9	62.3
0.18	52.8	57.0	45.5	38.0	60.4	64.7	56.6	45.9	65.9	69.9	63.9	58.7	70.8	74.7	70.1	67.2
0.20	54.6	58.5	47.6	39.7	61.9	65.9	58.2	47.4	67.2	71.1	65.4	60.6	71.9	75.8	71.4	68.4
0.25	58.2	61.5	52.1	43.4	64.8	68.5	61.6	50.6	69.7	73.5	68.6	64.1	74.3	77.9	74.1	70.8
0.37	63.9	66.0	59.7	49.7	69.5	72.7	67.6	56.1	73.8	77.3	73.5	69.3	78.1	81.1	78.0	74.3
0.40	64.9	66.8	61.1	50.9	70.4	73.5	68.8	57.2	74.6	78.0	74.4	70.1	78.9	81.7	78.7	74.9
0.55	69.0	70.0	65.8	56.1	74.1	77.1	73.1	61.7	77.8	80.8	77.2	73.0	81.5	83.9	80.9	77.0
0.75	72.1	72.1	70.0	61.2	77.4	79.6	75.9	66.2	80.7	82.5	78.9	75.0	83.5	85.7	82.7	78.4
1.1	75.0	75.0	72.9	66.5	79.6	81.4	78.1	70.8	82.7	84.1	81.0	77.7	85.2	87.2	84.5	80.8
1.5	77.2	77.2	75.2	70.2	81.3	82.8	79.8	74.1	84.2	85.3	82.5	79.7	86.5	88.2	85.9	82.6
2.2	79.7	79.7	77.7	74.2	83.2	84.3	81.8	77.6	85.9	86.7	84.3	81.9	88.0	89.5	87.4	84.5
3	81.5	81.5	79.7	77.0	84.6	85.5	83.3	80.0	87.1	87.7	85.6	83.5	89.1	90.4	88.6	85.9
4	83.1	83.1	81.4	79.2	85.8	86.6	84.6	81.9	88.1	88.6	86.8	84.8	90.0	91.1	89.5	87.1
5.5	84.7	84.7	83.1	81.4	87.0	87.7	86.0	83.8	89.2	89.6	88.0	86.2	90.9	91.9	90.5	88.3
7.5	86.0	86.0	84.7	83.1	88.1	88.7	87.2	85.3	90.1	90.4	89.1	87.3	91.7	92.6	91.3	89.3
11	87.6	87.6	86.4	85.0	89.4	89.8	88.7	86.9	91.2	91.4	90.3	88.6	92.6	93.3	92.3	90.4
15	88.7	88.7	87.7	86.2	90.3	90.6	89.7	88.0	91.9	92.1	91.2	89.6	93.3	93.9	92.9	91.2
18.5	89.3	89.3	88.6	86.9	90.9	91.2	90.4	88.6	92.4	92.6	91.7	90.1	93.7	94.2	93.4	91.7
22	89.9	89.9	89.2	87.4	91.3	91.6	90.9	89.1	92.7	93.0	92.2	90.6	94.0	94.5	93.7	92.1
30	90.7	90.7	90.2	88.3	92.0	92.3	91.7	89.8	93.3	93.6	92.9	91.3	94.5	94.9	94.2	92.7
37	91.2	91.2	90.8	88.8	92.5	92.7	92.2	90.3	93.7	93.9	93.3	91.8	94.8	95.2	94.5	93.1
45	91.7	91.7	91.4	89.2	92.9	93.1	92.7	90.7	94.0	94.2	93.7	92.2	95.0	95.4	94.8	93.4
55	92.1	92.1	91.9	89.7	93.2	93.5	93.1	91.0	94.3	94.6	94.1	92.5	95.3	95.7	95.1	93.7
75	92.7	92.7	92.6	90.3	93.8	94.0	93.7	91.6	94.7	95.0	94.6	93.1	95.6	96.0	95.4	94.2
90	93.0	93.0	92.9	90.7	94.1	94.2	94.0	91.9	95.0	95.2	94.9	93.4	95.8	96.1	95.6	94.4
110	93.3	93.3	93.3	91.1	94.3	94.5	94.3	92.3	95.2	95.4	95.1	93.7	96.0	96.3	95.8	94.7
132	93.5	93.5	93.5	91.5	94.6	94.7	94.6	92.6	95.4	95.6	95.4	94.0	96.2	96.4	96.0	94.9
160	93.7	93.8	93.8	91.5	94.8	94.9	94.8	93.0	95.6	95.8	95.6	94.3	96.3	96.6	96.2	95.1
200-1000	94.0	94.0	94.0	92.5	95.0	95.1	95.0	93.5	95.8	96.0	95.8	94.6	96.5	96.7	96.3	95.4

EFFICIENCY VALUES FOR 60 HZ ACCORDING TO IEC 60034-30-1:2014

Output	IE1				IE2				IE3				IE4			
kW	2	4	6	8	2	4	6	8	2	4	6	8	2	4	6	8
0.12	57.5	62.0	48.0	36.0	59.5	64.0	50.5	40.0	62.0	66.0	64.0	59.5	66.0	70.0	68.0	64.0
0.18	62.0	66.0	52.5	40.0	64.0	68.0	55.0	46.0	65.6	69.5	67.5	64.0	70.0	74.0	72.0	68.0
0.25	64.0	68.0	57.5	50.5	68.0	70.0	59.5	52.0	69.5	73.4	71.4	68.0	74.0	77.0	75.5	72.0
0.37	70.0	70.0	62.0	57.5	72.0	72.0	64.0	58.0	73.4	78.2	75.3	72.0	77.0	81.5	78.5	75.5
0.55	72.0	74.0	66.0	59.5	74.0	75.5	68.0	62.0	76.8	81.1	81.7	74.0	80.0	84.0	82.5	77.0
0.75	74.0	77.0	72.0	64.0	75.5	78.0	73.0	66.0	77.0	83.5	82.5	75.5	82.5	85.5	84.0	78.5
1.1	78.5	79.0	75.0	73.5	82.5	84.0	85.5	75.5	84.0	86.5	87.5	78.5	85.5	87.5	88.5	81.5
1.5	81.0	81.5	77.8	77.0	84.0	84.0	86.5	82.5	85.5	86.5	88.5	84.0	86.5	88.5	89.5	85.5
2.2	81.5	83.0	78.5	78.0	85.5	87.5	87.5	84.0	86.5	89.5	89.5	85.5	88.5	91.0	90.2	87.5
3.7	84.5	85.0	83.5	80.0	87.5	87.5	87.5	85.5	88.5	89.5	89.5	86.5	89.5	91.0	90.2	88.5
5.5	86.0	87.0	85.0	84.0	88.5	89.5	89.5	85.5	89.5	91.7	91.0	86.5	90.2	92.4	91.7	88.5
7.5	87.5	87.5	86.0	85.0	89.5	89.5	89.5	88.5	90.2	91.7	91.0	89.5	91.7	92.4	92.4	91.0
11	87.5	88.5	89.0	87.5	90.2	91.0	90.2	88.5	91.0	92.4	91.7	89.5	92.4	93.6	93.0	91.0
15	88.5	89.5	89.5	88.5	90.2	91.0	90.2	89.5	91.0	93.0	91.7	90.2	92.4	94.1	93.0	91.7
18.5	89.5	90.5	90.2	88.5	91.0	92.4	91.7	89.5	91.7	93.6	93.0	90.2	93.0	94.5	94.1	91.7
22	89.5	91.0	91.0	90.2	91.0	92.4	91.7	91.0	91.7	93.6	93.0	91.7	93.0	94.5	94.1	93.0
30	90.2	91.7	91.7	90.2	91.7	93.0	93.0	91.0	92.4	94.1	94.1	91.7	93.6	95.0	95.0	93.0
37	91.5	92.4	91.7	91.0	92.4	93.0	93.0	91.7	93.0	94.5	94.1	92.4	94.1	95.4	95.0	93.6
45	91.7	93.0	91.7	91.0	93.0	93.6	93.6	91.7	93.6	95.0	94.5	92.4	94.5	95.4	95.4	93.6
55	92.4	93.0	92.1	91.5	93.0	94.1	93.6	93.0	93.6	95.4	94.5	93.6	94.5	95.8	95.4	94.5
75	93.0	93.2	93.0	92.0	93.6	94.5	94.1	93.0	94.1	95.4	95.0	93.6	95.0	96.2	95.8	94.5
90	93.0	93.2	93.0	92.5	94.5	94.5	94.1	93.6	95.0	95.4	95.0	94.1	95.4	96.2	95.8	95.0
110	93.0	93.5	94.1	92.5	94.5	95.0	95.0	93.6	95.0	95.8	95.8	94.1	95.4	96.2	96.2	95.0
150	94.1	94.5	94.1	92.5	95.0	95.0	95.0	93.6	95.4	96.2	95.8	94.5	95.8	96.5	96.2	95.4
185	94.1	94.5	94.1	92.5	95.4	95.4	95.0	93.6	95.8	96.2	95.8	95.0	96.2	96.5	96.2	95.4
220 - 1000	94.1	94.5	94.1	92.5	95.4	95.4	95.0	93.6	95.8	96.2	95.8	95.0	96.2	96.8	96.5	95.4

GLOBALLY MINIMUM EFFICIENCY STANDARDS

Region	Country	Product range	Law / Regulation	MEPS
EUROPE	EUROPEAN UNION	400 V ± 10%; 50/60 Hz 0.12 - 1000 kW - 2-8 poles	UE 2019/1781 and AMENDMENT EU 2021/341 60034-30-1:2014	**IE4 motors from 75 to 200 kW** **IE3 motors from 0.75 to 1000 kW** **IE2 motors from 0.12 to <0.75kW** compulsory 01.07.2023
	SWITZERLAND	400 V ± 10%; 50/60 Hz 0.12 - 1000 kW - 2-8 poles	UE 2019/1781 and AMENDMENT EU 2021/341 60034-30-1:2014	
	TURKEY	400 V ± 10%; 50/60 Hz 0.12 - 1000 kW - 2-8 poles	UE 2019/1781 and AMENDMENT EU 2021/341 60034-30-1:2014	
	UNITED KINGDOM	400 V ± 10%; 50/60 Hz 0.12 - 1000 kW - 2-8 poles	UE 2019/1781 and AMENDMENT EU 2021/341 60034-30-1:2014	
NORTH AMERICA	CANADA	480 V/575 V ± 10%; 60 Hz 1 - 500 HP - 2-8 poles	IEEE 112-2004 CSA C390-10	**IE3** compulsory 28.06.2017
	MEXICO	460 V ± 10%; 60 Hz 1 - 500 HP - 2-8 poles	NOM-016-ENER 2016 CSA C390-10	**IE3** compulsory 19.12.2010
	USA	480 V ± 10%; 60 Hz 1 - 500 HP - 2-8 poles	IEEE 112-2004 CSA C390-10	**IE3** compulsory 01.06.2016
SOUTH AMERICA	BRAZIL	220/380/440/460/480 V ± 10%; 60 Hz 0.12 - 370 kW - 2-8 poles	ABNT NBR 17094-1 Portaria n. 01/2017	**IE3** compulsory 01.09.2019
	CHILE	380/400/420/440/460/690 V ± 10%; 50 Hz 0.75 Kw - 7.5 kW - 2-6 poles	NCH 3086	**IE2** compulsory 04.01.2011
OCEANIA	AUSTRALIA NEW ZEALAND	415 V/690 V±10%; 50 Hz 0.73 - 185 kW - 2-8 poles	GEMS Act of 2019 IEC 60034-30-1	**IE2** compulsory 10.07.2019
ASIA	CHINA	380 V ± 10%; 50 Hz 0.12 - 1000 kW - 2-8 poles	GB 18613-2020 Decree n. 35	**IE3** compulsory 01.06.2021
	INDIA	415 V/690 V ± 10%; 50Hz 0.12 - 1000 kW - 2-8 poles	IS:12615	**IE2** compulsory 04.02.2019
	JAPAN	200/220/400/440 V ± 10%; 50/60 Hz 0.75 - 375 kW - 2-6 poles	JIS C 4034-30 Energy Saving Act	**IE3** compulsory 01.04.2015
	SOUTH KOREA	up to 600 V ±10%; 60Hz 0.75 - 375 kW - 2-8 poles	MKE-2017-206 KS C IEC 60034	**IE3** compulsory 01.01.2018
	SINGAPORE	415 V ± 10%; 50 Hz 0.75 - 375 kW - 2-6 poles	Energy Conservation Act IEC 60034-2-1	**IE3** compulsory 01.01.2018
	SAUDI ARABIA	380 V/ 400 V ± 5%; 60 Hz 0.75 - 375kW - 2-8 poles	SASO 2893	**IE3** compulsory 01.01.2017

EUROPE – ECODESIGN REGULATION EU 2019/1781 AND AMENDMENT EU 2021/341

The Ecodesign Directive 2009/125/EC establishes, across the EU, a framework for setting eco-design requirements for energy-related products. It is a key instrument of EU policy for improving the energy efficiency and other aspects of the environmental performance of products placed on the market.

Requirements for the eco-design of electric motors and the use of variable speed drives were set out in Regulation (EC) 640/2009 on 22nd July 2009 then amended by Regulation (EU) 4/2014 on 6th January 2014.
This regulation was superseded on 25th October 2019 by Regulation (EU) 2019/1781, which sets out new statutory requirements for motors and drives.

The **Regulation EU 2019/1781 and Amendment EU 2021/341** specify efficiency requirements for single speed three-phase motors from 0.12 to 1000 kW, 2, 4, 6 and 8 poles, 50 Hz, 60 Hz and 50/60 Hz, and introduce in all UE countries the following MEPS:

FIRST STEP: AS OF 1ST JULY 2021

IE2 level: 0.12 to < 0.75 kW

IE3 level: 0.75 to 1.000 kW

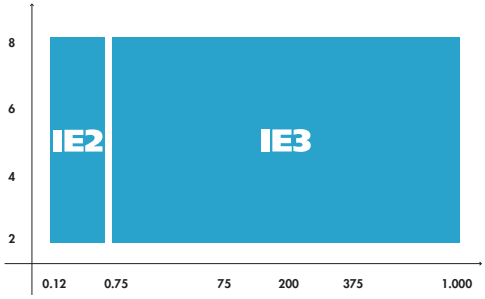

SECOND STEP: AS OF 1ST JULY 2023

IE2 level: 0.12 to < 0.75 kW

IE2 level: 0.12 to 1.000 kW
(All Ex motors, Single-phase motors)

IE3 level: 0.75 to 1.000 kW

IE4 level: 75 to 200 kW - 2-6 poles

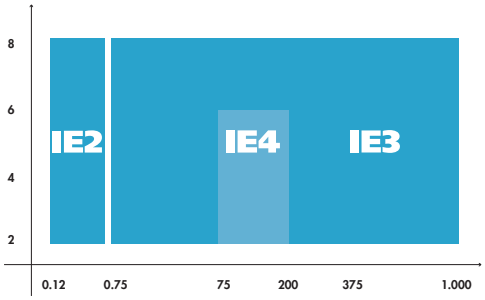

Regulation, Standard	EU 2019/1781 and Amendment EU 2021/341 - IEC 60034-30-1:2014
Testing Method	IEC 60034-2-1:2014
Regulation Scope	• Three-phase single speed motors: 0.12 kW - 1000 kW - 2,4,6 and 8 poles • 50 Hz, 60 Hz, 50/60 Hz • Continuous duty operation (S1, S3>80%, S6>80%) • Brake motors • TEFC and TEAO design • Ex motors (excluded Ex eb)
MEPS	Since 01.07.2023 **Energy Efficient IE4 – 75 to 200 kW** **Energy Efficient IE3 – 0.75 to 1000 kW** **Energy Efficient IE2 – 0.12 to < 0.75 kW** **Energy Efficient IE2 – 0.12 to 1000 kW (All Ex motors, single-phase motors)**
Exclusions	• Non continuous duty motors (duty<80%) • TENV design • Motors above +60°C and below -30°C

USA & CANADA

Regulation, Standard	DOE 10 CFR Part 431 – Subpart B (USA) Amendment 13 to Energy Efficiency Regulation (Canada)
Testing Method	IEEE 112-2004, CSA C390-10
Regulation Scope	• Three-phase motors: 1HP - 500HP - 2,4,6 and 8 poles • Continuous duty operation (S1) • Up to 600V • 60Hz or 50/60Hz • Continuous duty operation (S1) • TEFC and TENV design
MEPS	Since 01.06.2016 in USA and 28.06.2017 in Canada **NEMA Premium (IE3)**
Exclusions	• All non S1 motors • Converter motors

AUSTRALIA & NEW ZEALAND

Regulation, Standard	GEMS ACT 2019, IEC 60034-30-1
Testing Method	IEC 60034-2-1:2014
Regulation Scope	• Three-phase motors: 0.73kW -185kW – 2,4,6 and 8 poles • Up to 1100V • 50Hz or 60Hz • All service duty operation (except S2) • TEFC and TEAO design
MEPS	Since 10.07.2019 **Energy Efficient (IE2)**
Exclusions	• S2 motors • Converter motors • Integral Gear motors

BRAZIL - MEPS SCHEME

Regulation, Standard	Portaria n. 01/2017 – ABNT NBR 17094-1
Testing Method	NBR 17094
Regulation Scope	• Three-phase motors: 0.12kW - 370kW – 2,4,6 and 8 poles • Up to 1000V • 60Hz or 60/50Hz • Service duty operation S1 or S3≥80% • TEFC and TEAO design
MEPS	Since 01.09.2019 **Energy Efficient IR3 (IE3)**
Exclusions	• All non S1motors • All non S3<80% motors

CHINA – ENERGY LABEL

Regulation, Standard	Decree n.35 - GB 18613-2020
Testing Method	GB / T 1032
Regulation Scope	• Three-phase motors: 0.12kW to 1000kW - 2,4,6 and 8 poles • Up to 1000V • 50Hz or 50/60Hz • Service duty operation S1 or S3≥80% • TEFC design
MEPS	Since 01.06.2021 **Energy Efficient GB3 (IE3)**
Exclusions	• All non S1motors • Non-ventilated motors • Special motors for specific machines requirements

KOREA – MEPS SCHEME

Regulation, Standard	MKE-2017-206 – KS C IEC 60034
Testing Method	KS C IEC60034-2-1
Regulation Scope	• Three-phase motors: 0.75kW to 375kW - 2,4,6 and 8 poles • Up to 600V • 60Hz • Service duty operation S1, S3≥80% • TEFC design
MEPS	Since 01.10.2018 **Energy Efficient (IE3)**
Exclusions	• S2 motors • Converter motors • Non-ventilated motors

JAPAN – ENERGY SAVING ACT

Regulation, Standard	Energy Saving Act / Top Runner Program – JIS C 4034-30
Testing Method	IEC60034-2-1
Regulation Scope	• Three-phase motors: 0.75kW to 375kW - 2,4 and 6 poles • Up to 1000V • 50Hz, 60Hz or 50/60Hz • Service duty operation S1, S3≥80%
MEPS	Since 01.04.2015 **Energy Efficient (IE3)**
Exclusions	• S2 motors • Converter motors • Ex motors

REST OF THE WORLD

Many Countries are recognizing the importance of Energy Efficiency in electric motors and its potential economic and environmental impact and are working on developing mandatory minimum energy performance standards to be implemented in the near future.
These standards are expected to follow the IEC60034-30-1 classification.

CONDITIONS OF INSTALLATION

The motors comply with the relevant standards and regulations, especially:

ELECTRICAL	Rating and performance	IEC 60034-1
	Methods for determining losses and efficiency using tests	IEC 60034-2
	Standard method for determing losses and efficiency from tests	IEC 60034-2-1
	Efficiency classes of single speed, three-phase, cage-induction motors (IE-code)	IEC 60034-30-1
	Terminal markings and direction of rotation	IEC 60034-8
	Starting performance	IEC 60034-12
	Standard voltages	IEC 60038
	Insulating materials	IEC 60085
MECHANICAL	Dimensions and output ratings	IEC 60072
	Mounting dimensions and relationship frame sizes-output ratings, IM B3, IM B5, IM B14	IEC 60072
	Cylindrical shaft ends for electric motors	IEC 60072
	Degrees of protection	IEC 60034-5
	Methods of cooling	IEC 60034-6
	Mounting arrangements	IEC 60034-7
	Noise limits	IEC 60034-9
	Mechanical vibration	IEC 60034-14
	Mounting flanges	DIN 42948
	Tolerances of mounting and shaft extensions	DIN 42955
	Classification of environmental conditions	IEC 60721-2-1
	Mechanical vibration; balancing	ISO 8821

The motors are designed for operation at **altitudes ≤ 1000 m** above sea-level and at **ambient temperatures of up to 40° C**. Exceptions are indicated on the rating plate. The motors conform to **degree of protection IP 55** to IEC 60034-5[1]. Higher protection on request.

The standard design for horizontal mounting is suitable for indoor and protected outdoor installation, climate group **moderate** (see page 15) (temperature of coolant -20° to +40° C). For unprotected outdoor installation or severe climatic conditions (moisture category wet, climate group **worldwide**, extremely dusty site conditions, aggressive industrial atmosphere, danger of storm rain and coastal climate, danger of attack by termites, etc.), as well as vertical mounting, special protective measures are recommended, such as:

- Protective cowl (for vertical shaft-down motors)
- For vertical shaft-up motors additional bearing seal and flange drainage
- Special paint finish
- Treatment of winding with protective moisture-proof varnish
- Anti-condensation heating (possibly winding heating)
- Condensation drain holes

The special measures to be applied have to be agreed with the factory once the conditions of installation have been settled.

The corresponding conditions of installation have to be clearly indicated in the order.

[1] IP54 for brake motors AMS and for AMBZ, AMBY from size 63 to 132

ELECTRICAL TOLERANCES

For industrial motors to **EN 60034-1**, certain tolerances must be allowed on guaranteed values, taking into consideration the necessary tolerances for the manufacture of such motors and the materials used. The standard includes the following remarks:

1- It is not intended that guarantees necessarily have to be given for all or any of the items involved. Quotations including guaranteed values subject to tolerances should say so, and the tolerances should be in accordance with the table.
2- Attention is drawn to the different interpretation of the term guarantee. In some countries a distinction is made between guaranteed values and typical or declared values.
3- Where a tolerance is stated in only one direction, the value is not limited in the other direction.

Values for	Tolerance
Efficiency (η) (by indirect determination)	- 0.15 (1 - η) at $P_N \leq 150$ kW - 0.1 (1 - η) at $P_N > 150$ kW
Power factor (cos φ)	$\frac{1 - \cos \varphi}{6}$, minimum 0.02, maximum 0.07
Slip (s) (at rated load and at working temperature)	± 20 % of the guaranteed slip at $P_N \geq 1$ kW ± 30 % of the guaranteed slip at $P_N < 1$ kW
Breakaway starting current (I_A) (in the starting circuit envisaged)	+ 20 % of the guaranteed starting current (no lower limit)
Breakaway torque (M_A)	- 15 % and + 25 % of the guaranteed breakaway torque (+ 25 % may be exceeded by agreement)
Pull-up torque (M_S)	- 15 % of the guaranteed value
Pull-out torque (M_K)	- 10 % of the guaranteed value (after allowing for this tolerance, M_K/M_N not less than 1.6)
Moment of inertia (J)	± 10 % of the guaranteed value

MECHANICAL TOLERANCES

According to **IEC 60072-1**, the following tolerances on mechanical dimensions of electric motors are permitted:

Parameter	Code	Tolerance	
Shaft height	H	- up to 250 - over 250	-0.5 mm -1 mm
Diameter of shaft end[1)]	D-DA	- from 11 to 28 mm - from 38 to 48 mm - from 55 to 100 mm	j6 k6 m6
Hub key width	F-FA		h9
Flange spigot	N	- up to 132 - over size 132	j6 h6

1) Centering holes in shaft extension to DIN 332 part 2

DEGREES OF PROTECTION

Degrees of mechanical protection for machines are designated in accordance with **IEC 60034-5** by the letters **IP** and two characteristic numerals.

First numeral: Protection against contact and ingress of foreign bodies

IP	Description
0	No special protection
1	Protection against solid foreign bodies larger than 50 mm (Example: inadvertent contact with the hand)
2	Protection against solid foreign bodies larger than 12 mm (Example: inadvertent contact with the fingers)
3	Protection against solid foreign bodies larger than 2.5 mm (Example: Wires, tools)
4	Protection against solid foreign bodies larger than 1 mm (Example: Wires, bands)
5	Protection against dust (harmful deposits of dust)
6	Complete protection against dust

Second numeral:
Protection against ingress of water

IP	Description
0	No special protection
1	Protection against vertically falling water drops (condensation)
2	Protection against dropping water when inclined by up to 15°
3	Protection against waterspray at up to 60° from vertical
4	Protection against water splashed from any direction
5	Protection against water projected by a nozzle from any direction
6	Protection against heavy seas or water projected in powerful jets
7	Protection when submerged between 0.15 and 1 m.
8	Protection when continuously submerged in water at conditions agreed between the manufacturer and the user

MOUNTING ARRANGEMENTS

Mounting arrangements for rotating electrical machines are designated according to **IEC 60034-7**, *Code I* (in brackets Code II).

Foot mounting

IM B3 (IM 1001)

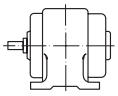

IM B6 (IM 1051)

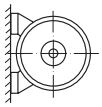

IM B7 (IM 1061)

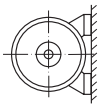

IM B8 (IM 1071)

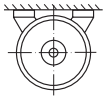

IM V5 (IM 1011)

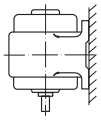

IM V6 (IM 1031)

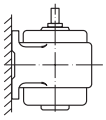

IM B34 (IM 2101)
Flange type C to DIN 42 948 at drive end

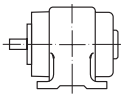

Flange mounting

IM B5 (IM 3001)
Flange type A to DIN 42 948 at drive end

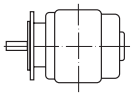

IM V1 (IM 3011)
Flange type A to DIN 42 948 at drive end

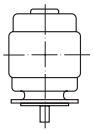

IM V3 (IM 3031)
Flange type A to DIN 42 948 at drive end

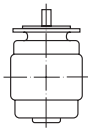

IM B35 (IM 2001)
Flange type A to DIN 42 948 at drive end

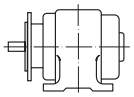

IM B14 (IM 3601)
Flange type C to DIN 42 948 at drive end

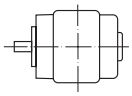

IM V18 (IM 3611)
Flange type C to DIN 42 948 at drive end

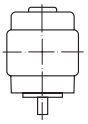

IM V19 (IM 3631)
Flange type C to DIN 42 948 at drive end

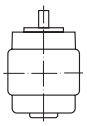

Motors without endshield

IM B9 (IM 9101)
without endshield and without ball bearings on drive end

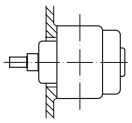

IM V8 (IM 9111)
without endshield and without ball bearings on drive end

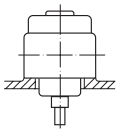

IM V9 (IM 9131)
without endshield and without ball bearings on drive end

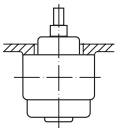

IM B15 (IM 1201)
without endshield and without ball bearings on drive end

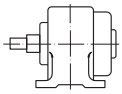

All standard motors can be installed according to the following mounting arrangements:

Frame Size	B3	B5	B35	Based on B5		Based on B3					Based on B35	
				V1	V3	V5	V6	B6	B7	B8	V15	V36
56-160	√	√	√	√	√	√	√	√	√	√	√	√
180-225	√	√	√	√	*	*	*	*	*	*	*	*
250-315	√	*	√	*	*	*	*	*	*	*	*	*

* for high loads refer to us

It is essential to state the desired mounting arrangement when ordering, as the constructive design depends partly on the mounting arrangement.

MATERIALS

Motor parts	Frame size	Material
Motor housing	56 - 160 180 - 315	Aluminium alloy Cast iron
Endshield	56 - 160 180 - 315	Aluminium alloy* Cast iron
Flanged endshield	56 - 160 180 - 315	Aluminium alloy* Cast iron
Fan cover	56 - 112 56 - 112 132 - 315	Plastics Sheet steel (optional) [1)] Sheet steel
Fan	56 - 315 56 - 160	Plastics Aluminium alloy (optional)
Terminal box	56 - 112 56 - 112 132 - 160 180 - 315	Plastics Aluminium alloy (optional) [2)] Aluminium alloy Cast iron

1) Standard for brake motors type AMBY and AMBZ and for AMS 112
2) For three-phase motors only

* Cast iron option for 112-132

PAINT FINISH

NORMAL FINISH

Suitable for climate group **Moderate** to IEC 60721-2-1, e.g. indoor and outdoor installation.
For short periods: up to 100% rel. humidity at temperatures up to +30° C.
Continuously: up to 85% rel. humidity at temperatures up to +25° C.
Standard paint color: RAL 9005.

SPECIAL FINISH K1

Suitable for climate group **Worldwide** to IEC 60721-2-1, e.g. outdoor installation in corrosive chemical and marine atmospheres.
For short periods: up to 100% rel. humidity at temperatures up to +35° C.
Continuously: up to 98% rel. humidity at temperatures up to +30° C.

BEARINGS

CLASSIFICATION OF BEARINGS (STANDARD DESIGN) [1)]

Bearings for standard design have permanent lubrication. Ball bearings to ISO15 (DIN 625).

		All Motors	
Frame size	Poles	DE - NDE	Dimension
56	2 - 4	6201-2Z	12x32x10
63	2 - 4	6202-2Z	15x35x11
71	2 - 8	6203-2Z	17x40x12
80	2 - 8	6204-2Z	20x47x14
90	2 - 8	6205-2Z	25x52x15
100	2 - 8	6206-2Z	30x62x16
112	2 - 8	6306-2Z	30x72x19
132	2 - 8	6208-2Z	40x80x18
160	2 - 8	6309-2Z	45x100x25
180	2 - 6	6311 C3	55x120x29
200	2 - 6	6312 C3	60x130x31
225	2 - 6	6313 C3	65x140x33
250	2 - 6	6314 C3	70x150x35
280	2	6314 C3	80x170x39
280	4 - 6	6317 C3	85x180x41
315	2	6317 C3	85x180x41
315	4 - 6	NU319 - 6319 C3	95x200x45

1) With regard on bearings for special design, consult us

LUBRICATION

Permanent lubrication up to 160 frame
180 frame up with regreasing facility lubrication nipple is a flat M10x1 to DIN 3404

ROLLER BEARINGS

Roller bearings available as an option. Please consult us.

BEARING ARRANGEMENT

Frame size	Bearing DE	Bearing NDE	Spring-loaded
56 - 160 Standard motors	Non-locating bearing	Non-locating bearing	Non-drive end
63 - 160 Brake motors	Non-locating bearing	Locating bearing	Drive end
180 - 315 Standard motors	Locating bearing	Non-locating bearing	Non-drive end

RELUBRICATION INTERVALS

Relubrication intervals for operating temperatures up to 70° C (hours)

	3000 RPM		1500 RPM		1000 RPM		Quantity
Frame Size	Horizontal	Vertical	Horizontal	Vertical	Horizontal	Vertical	gr
180	2.000	2.000	5.000	5.000	6.500	6.500	20
200	1.500	1.500	4.600	4.600	6.300	6.300	25
225	1.500	1.500	4.600	4.600	6.300	6.300	25
250	1.000	1.000	4.500	4.500	6.000	6.000	35
280	1.000	1.000	4.000	4.000	6.000	6.000	35
315	1.000	1.000	3.800	3.800	5.500	5.500	50

BELT DRIVE

The data apply only to the normal drive end shaft extension of IM B3 motors with one speed.
Calculation of belt drive:

$$F_R = \frac{19120 \cdot P \cdot k}{D_1 \cdot n}$$

F_R = Radial shaft load in N
P = Output in kW
n = Speed in rpm
D_1 = Pulley diameter in m
k = Belt tension factor, varying with the type of belt, assumed to be approximately:
3-4 for normal flat belt without idler pulley
2-2.5 for normal flat belt with idler pulley
2.2-2.5 for V-belt
For exact data apply to the belt manufacturer.

PERMISSIBLE AXIAL FORCES

Maximum permissible axial forces without additional radial forces*

Frame size	Horizontal shaft				Vertical shaft - force upwards				Vertical shaft - force downwards			
	3000 min $^{-1}$ kN	1500 min $^{-1}$ kN	1000 min $^{-1}$ kN	750 min $^{-1}$ kN	3000 min $^{-1}$ kN	1500 min $^{-1}$ kN	1000 min $^{-1}$ kN	750 min $^{-1}$ kN	3000 min $^{-1}$ kN	1500 min $^{-1}$ kN	1000 min $^{-1}$ kN	750 min $^{-1}$ kN
56	0.16	0.21	-	-	0.18	0.22	-	-	0.15	0.19	-	-
63	0.19	0.26	-	-	0.21	0.28	-	-	0.17	0.24	-	-
71	0.23	0.33	0.33	0.37	0.26	0.35	0.36	0.39	0.21	0.30	0.31	0.34
80	0.32	0.44	0.46	0.50	0.34	0.47	0.48	0.53	0.29	0.41	0.43	0.47
90	0.34	0.48	0.49	0.54	0.38	0.47	0.53	0.58	0.31	0.44	0.46	0.51
100	0.48	0.68	0.70	0.77	0.54	0.74	0.76	0.83	0.43	0.62	0.64	0.71
112	0.48	0.68	0.70	0.77	0.56	0.75	0.77	0.84	0.40	0.60	0.62	0.69
132 S	0.80	1.13	1.16	1.28	1.00	1.32	1.36	1.47	0.61	0.93	0.97	1.08
132 M	0.78	1.09	1.13	1.24	0.99	1.30	1.33	1.45	0.58	0.89	0.92	1.03
160 M	0.84	1.18	1.21	1.33	1.18	1.52	1.56	1.68	0.50	0.83	0.87	0.99
160 L	0.82	1.15	1.18	1.30	1.18	1.51	1.55	1.67	0.46	0.79	0.82	0.94
180	0.82	1.15	1.18	1.30	1.18	1.51	1.55	1.67	0.46	0.79	0.82	0.94
200	0.82	1.15	1.18	1.30	1.18	1.51	1.55	1.67	0.46	0.79	0.82	0.94
225	1.10	1.60	1.90	2.40	2.10	2.60	2.90	3.40	0.30	0.70	1.00	1.50
250	1.00	1.60	2.00	2.50	2.30	2.70	3.20	3.70	0.20	0.60	1.10	1.50
280	1.70	1.90	2.40	2.90	2.90	3.10	3.60	3.70	0.15	0.30	0.80	1.00
315	2.00	-	-	-	3.60	8.00	9.20	7.40	1.00	1.90	2.40	2.90

Values for 50 Hz. For service on 60 Hz, reduce values by 10%

* Consult according to direction of force

PERMISSIBLE RADIAL FORCES

Without additional axial force (Ball bearings)

Nominal life = 20.000 h (Lh10)

F_R = permissible radial force in kN in load point corresponding to half shaft extension

Frame size	3000 min $^{-1}$ kN	1500 min $^{-1}$ kN	1000 min $^{-1}$ kN	750 min $^{-1}$ kN
56	0.34	0.42	-	-
63	0.38	0.48	-	-
71	0.46	0.58	0.67	0.73
80	0.59	0.83	0.86	0.94
90	0.67	0.94	0.97	1.07
100	0.92	1.29	1.33	1.47
112	0.93	1.30	1.34	1.48
132 S	1.35	1.90	1.96	2.15
132 M	1.40	1.97	2.03	2.23
160 M	1.55	2.17	2.23	2.46
160 L	1.58	2.22	2.29	2.52
180 M	3.00	4.44	4.55	-
180 L	3.02	4.47	4.58	-
200	5.24	6.85	8.01	-
225	6.11	7.80	9.09	-
250	6.79	8.82	10.31	-
280 S	7.76	11.90	13.87	-
280 M	7.79	11.99	13.97	-
315 S/M	7.02	11.35	13.40	-
315 L	7.03	11.37	13.35	-

For higher output (progressive motor) please contact us

NEMA MOUNTING

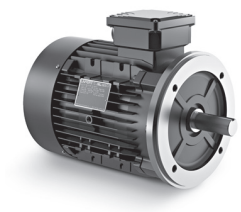

IEC Frame size	NEMA Size	Type C Face (B14)
71	**56**	✓
80	**56**	✓
90	**143/145**	✓
100	**182/184**	✓
112	**182/184**	✓
132	**213/215**	✓
160	**213/215**	✓

Foot mounting available with IEC shaft height and NEMA shaft and flange dimensions

SPECIAL ENDSHIELDS AND FLANGES

Full range of smaller sized and over sized flanges

Frame size	Smaller sized Flange IM B5 [1]	Smaller sized Flange IM B14	Over sized Flange IM B5	Over sized Flange IM B14
56	NA	NA	NA	63
63	56	56	71 [3]	71-80
71	56-63	63	80-90	80-90
80	63-71	63-71	NA	90-100
90 S-L	63-71	71-80	100 [3]	100-112
100 L	71-80	90	NA	132
112 M	80 [2] -90 [2]	90	132 [7]	132
132 S	112 [2]	112	NA	160 [1] [4]
132 M	112	112	160 [4]	160
160 M	NA	132	NA	NA
160 L	NA	132	NA	NA

Possibility to fit over sized bearings

Frame size	IM B3	IM B5	IM B14
56	NA	NA	NA
63	6203-6205	6203	6203-6205
71	6204-6205	6204-6205	6204-6205
80	6205-6206	6205-6206	6205-6206
90 S-L	6206	6206-6308	6206
100 L	6306	6306-6208	6306
112 M	6208	6208	6208
132 S	6308-6309	6308	6308 [4]
132 M	6308-6309	6308-6309	6309
160 M	NA	6310	6310
160 L	NA	6310	6310

For higher output (progressive motor) please consult us

Aluminium endshields and flanges with steel insert

Frame size	Endshield DE	Endshield NDE	IM B5	IM B14
71	A	A	A	NA
80	A	A	A	A
90 S-L	A	A	NA	NA
100 L	A	A	A	NA
112 M	A	A	A	NA
132 S	NA	NA	NA	NA
132 M	NA	NA	A [5]	NA
160 M	NA	NA	NA	NA
160 L	NA	NA	NA	NA

Cast iron endshields and flanges

Frame size	Endshield DE	Endshield NDE	IM B5	IM B14	Regreasing device DE	Regreasing device NDE	Regreasing device IM B5	Regreasing device IM B14
71	NA	NA	NA	NA	NA	NA	NA	NA
80	A [6]	A [6]	NA	NA	NA	NA	NA	NA
90 S-L	A [6]	A [6]	NA	NA	NA	NA	NA	NA
100 L	A [6]	A [6]	NA	NA	NA	NA	NA	NA
112 M	A [6]	A [6]	NA	NA	NA	NA	NA	NA
132 S	A	A	A	A	NA	NA	A	A
132 M	A	A	A	A	A	A	A	A
160 M	A	A	A	A	A	A	A	A
160 L	A	A	A	A	A	A	A	A

A Available NA Not available
1) Not available for all motor ratings; consult us
2) Cast iron endshield with radial slotted holes
3) Not interchangeable with standard execution
4) Cast iron endshield
5) Only with oversized bearing (6308)
6) Special mechanical design
7) Only with oversized bearing (6208)

COOLING

Surface cooling, independent of the direction of rotation.
Motors type AM available without internal fan as type AG, e.g. for installation in a directed air stream (outputs on request).

VIBRATION

The amplitude of vibration in electric motors is governed by **EN 60034-14** *Mechanical vibration of rotating electrical machines with shaft heights 56 and larger - methods of measurement and limits.*
Standard motors are designed to vibration grade A (normal). Vibration grade B is available at extra cost.

Rotors are at present dynamically balanced with **half** key fitted as per DIN ISO 8821. Other balancing only on request.
The motors are identified as follows:

"H" or "blank" means balanced with *half key*
"F" means balanced with *full key*
"N" means *no key*

POSITION AND DIMENSIONS OF KEY

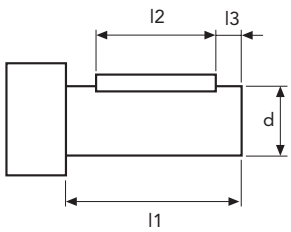

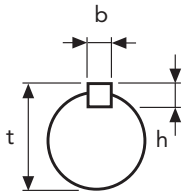

Frame size	Poles	d x l1	b x h	l2	l3	t
56		9 x 20	3 x 3	15	2.5	10.2
63		11 x 23	4 x 4	15	4	12.5
71		14 x 30	5 x 5	20	6	16
80		19 x 40	6 x 6	30	6	21.5
90		24 x 50	8 x 7	40	6	27
100		28 x 60	8 x 7	50	6	31
112		28 x 60	8 x 7	50	6	31
132		38 x 80	10 x 8	70	6	41
160		42 x 110	12 x 8	100	6	45
180		48 x 110	14 x 9	90	10	51.5
200		55 x 110	16 x 10	100	5	59
225	2	55 x 110	16 x 10	100	5	59
225	4 - 6	60 x 140	18 x 11	125	7.5	64
250	2	60 x 140	18 x 11	125	7.5	64
250	4 - 6	65 x 140	18 x 11	125	7.5	69
280	2	65 x 140	18 x 11	125	7.5	69
280	4 - 6	75 x 140	20 x 12	125	7.5	79.5
315	2	75 x 140	20 x 12	125	5	69
315	4 - 6	80 x 170	22 x 14	160	5	85

Dimensions in mm.
For larger shafts in special design the dimensions l2 and l3 are maintained.

ANTI-CONDENSATION HEATER

On request, motors which due to strong temperature fluctuations are exposed to condensation during standstill, can be fitted against surcharge with an anti-condensation heater (space heater).
For supply voltage and heater rating please refer to the following table:

Frame size	Supply voltage (V)	Heater rating per motor (W)
112 - 160	110 or 230	25
180 - 225	110 or 230	50
250 - 280	110 or 230	50
315	110 or 230	75

During operation of the motor, the heating must be switched off.

NOISE

The noise level of an electrical machine is determined by measuring the sound pressure level in accordance with curve A of the sound level meter to EN 60651 and is indicated in dB (A).
The permitted noise levels of electrical machines are fixed in EN 60034-9 (IEC 34-9). The noise level of our motors is well below these limit values.
Air-borne sound measurements are carried out in an anechoic testing chamber to EN 21680-ISO 1680.
Speed corresponding to a mains frequency of 50 Hz and the number of poles.

NOISE LEVELS

The noise values listed below refer to 50 Hz at rated voltage with a tolerance of up to + 3 dB(A).
Values for pole-changing motors on request. For 60 Hz supply values are 3-5 dB(A) higher.
Sound pressure level L_{pA} and sound power level L_{WA} for three-phase single-speed motors with dimensions and output ratings to IEC 60072

Frame	2 poles		4 poles		6 poles		8 poles	
size	LWA	LpA	LWA	LpA	LWA	LpA	LWA	LpA
56	57	48	47	38				
63	58	49	47	38				
71	61	52	51	42	49	40		
80	72	60	60	48	52	40	47	35
90	74	62	61	49	58	46	54	42
100	78	66	62	50	62	51	58	46
112	80	68	65	53	65	53	58	46
132	81	72	71	59	69	57	64	52
160	87	74	75	62	71	58	69	56
180	90	77	78	66	74	62	72	60
200	91	78	80	68	77	65	74	62
225	92	80	88	76	80	68	75	64
250	93	81	88	76	80	68	75	64
280	93	82	89	79	83	71	81	70
315	93	82	89	79	83	71	81	70

RATED VOLTAGE

For the rated voltage of the motors, **EN 60034-1** allows a **tolerance of ± 5 %**. According to **IEC 60038**, the mains voltages may have a **tolerance of ± 10 %**.

Therefore the three-phase motors are designed for the following rated voltage ranges (exceptions are shown in the data tables):

Mains voltage to IEC 60038	Rated voltage range of motor
230 V ± 10%	218-242 V ± 5%
400 V ± 10%	380-420 V ± 5%
690 V ± 10%	655-725 V ± 5%

Within the rated motor voltage range, the permissible maximum temperature is not exceeded. When the motors are operated at the limits of the voltage tolerance, the permissible overtemperature of the stator winding may be exceeded by 10 K.

Nameplates are marked with the maximum rated currents within the stated voltage ranges.

For brake motors, for motors in 500 V, 50 Hz design, and all not standard voltages, no voltage range is marked. The voltage tolerances to EN 60034-1 apply.

RATED FREQUENCY

Three-phase 50 Hz motors can also be operated on 60 Hz mains, provided the mains voltage increases proportionally to the frequency. The relative values for starting and breakaway torque remain nearly unchanged and slightly increase for the starting current. The rated speed increases by the factor 1.2 and output by factor 1.15. Should a motor designed for 50 Hz be operated at 60 Hz without the voltage being increased, the rated output of the motor cannot be increased. Under these operating conditions, rated speed increases by factor 1.2. The relative values for starting and breakaway torque are reduced by factor 0.82 and for starting current by factor 0.9.

Additionally to the voltage range for 50 Hz operation, three-phase single-speed motors (not brake motors) are also marked with the voltage range for 60 Hz operation.

Nameplates examples:

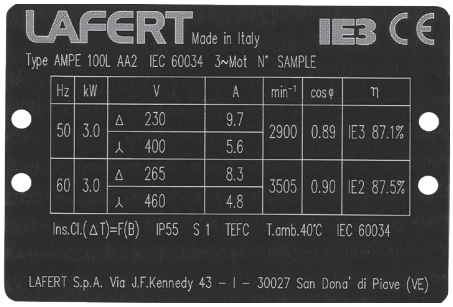

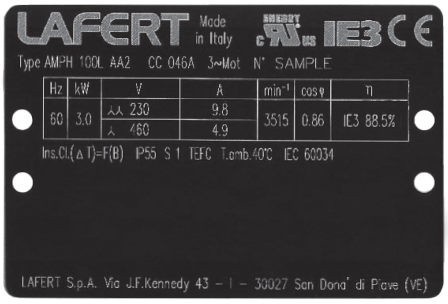

RATED CURRENT

For three-phase motors the rated currents listed in the data tables apply to an operating voltage of 400 V. The conversion to other operating voltages, with output and frequency remaining unchanged, is to be made as follows:

Nominal voltage (V)	230	380	**400**	440	500	660	690
Conversion factor x I_N	1.74	1.05	**1.0**	0.91	0.80	0.61	0.58

RATED TORQUE

$$\text{Rated torque in Nm} = 9550 \times \frac{\text{Rated power in kW}}{\text{Rated speed in rpm}}$$

OUTPUT

The outputs stated in this catalogue are for constant load in continuous running duty S1 according to EN 60034-1, based on an ambient temperature of 40° C and installation at altitudes up to 1000 m above sea level.

For severe operating conditions, e.g. high switching rate, long run-up time or electric braking, a thermal reserve is necessary, which could call for higher thermal class or the use of a motor with a higher rating. In these cases we recommend to enquire with detailed information on the operating conditions.

OVERLOAD

At operating temperature three-phase motors are capable of withstanding an overload for 15 seconds at 1.5 times the rated torque at rated voltage. This overload is according to EN 60034-1 and will not result in excessive heating.
Utilizing thermal class F, motors can be operated continuously with an overload of 12%. Nevertheless this is not valid for motors which to catalogue are utilized to thermal class F.

CONNECTION

Motor output at 50 Hz	**230 V Δ 400 V Y**	**400 V Δ 690 V Y**	**500 V Y**	**500 VΔ**	**690 VΔ**
≤ 3 kW	standard	on request	on request	on request	-
4 to 5.5 kW	standard	standard	on request	on request	on request
≥ 7.5 kW	on request	standard	on request	on request	on request

INSULATION AND TEMPERATURE RISE

Class F insulation to EN 60034-1 is used throughout.
In standard design motors are intended for operation at 40° C ambient temperature with class B temperature rise only, with an overtemperature limit of 80 K. This also applies for the rated voltage range to IEC 60038. Exceptions are shown on the data tables.

Temperature rise (ΔT*) and maximum temperatures at the hottest points of the winding (T_{max}) according to the temperature classes of EN 60034-1.

	ΔT*	T_{max}
Class B	80 K	125° C
Class F	105 K	155° C
Class H	125 K	180° C

*Measurement by resistance method

Output reduction at ambient temperatures over 40° C

Ambient temperature	45° C	50° C	55° C	60° C
Class B Reduction of nominal output to approx.	95 %	90 %	85 %	80 %

When a winding is utilized to temperature class F (105K), no output reduction is required up to an ambient temperature of 55° C. *This does not apply to motors which in their standard design are already utilized to thermal class F.*

Installation at altitudes of more than 1000 m above sea level (see also EN 60034-1)

Altitude of installation	2000 m	3000 m	4000 m
At 40°C ambient temperature and thermal class B Rated output reduced to approx.	92 %	84 %	76 %
At 40°C ambient temperature and thermal class F Rated output reduced to approx.	89 %	79 %	68 %
Full nominal output to data tables with thermal class B and ambient temperature of	32° C	24° C	16° C
Full nominal output to data tables with thermal class F and ambient temperature of	30° C	19° C	9° C

STARTING RATE

The permissible number of starts per hour can be taken as given in the table below, provided the following conditions are met.
Additional moment of inertia ≤ moment of inertia of the rotor: load torque rising with the square of the speed up to nominal torque; starts at even intervals.

Shaft height	Permissible no. of starts per hour for		
	2 poles	4 poles	≥ 6 poles
56 - 71	100	250	350
80 - 100	60	140	160
112 - 132	30	60	80
160 - 180	15	30	50
200 - 225	8	15	30
250 - 315	4	8	12

For permissible number of starts for pole-changing motors and brake motors please consult us, indicating the complete operating conditions.

For the motors AMME/AMMEHE and AMDE series, time between stop and restart of the motor must be higher than 15 s.

THERMAL PROTECTION

The decision on a particular type of thermal protection should be taken according to the actual operating conditions. Motors may be protected by means of current-dependent thermal protection switches, overcurrent relays and temperature detectors.

Thermal protection is possible as follows:

- Thermal protection switch with bimetal release
- Thermistor protection with semiconductor temperature detectors (PTC) in the stator winding in connection with release (if required, with additional motor protection switch).
- Bimetal temperature detector as N/C or N/O in the stator winding (if required, with additional motor protection switch).
- Resistance thermometer for monitoring winding and bearing temperature.

Should protection of the motor be required, we install protection switch with bimetal release (semiconductor temperature detectors on request).

Operating specifications
Thermal cut-out

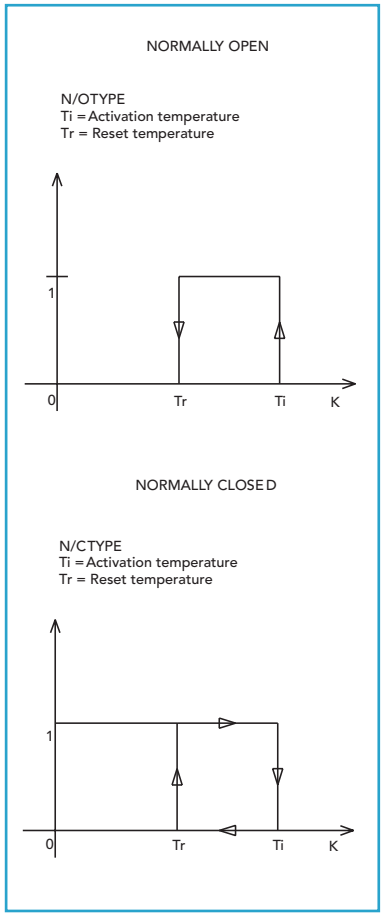

Operating specifications
of the thermistors

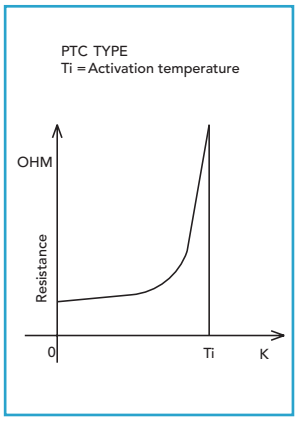

EXAMPLES OF CONNECTION

Protection method

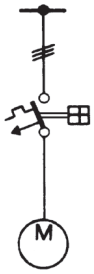

Motor protection switch with thermal and electromagnetic overcurrent release

Protection against:
- Overload in continuous service
- Locked rotor

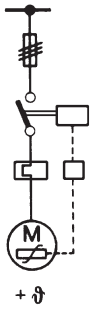

Contactor with overcurrent relay
Thermistor protection and fuse

In service against:
- Overload in continuous service
- Long starting and braking periods
- High switching rate

In case of fault against:
- Obstruction of cooling
- Increased ambient temperature
- Single-phase operation
- Frequency fluctuations
- Switching against locked rotor

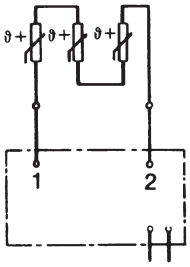

Semiconductor temperature detector with release

In service against:
- Overload in continous service
- Long starting and braking periods
- High switching rate

In case of fault against:
- Obstruction of cooling
- Increased ambient temperature
- Single-phase operation
- Frequency fluctuations
- Switching against locked rotor

AUXILIARIES

Encoder (standard design)

Pulses per revolution	200-2048
Max outputs frequency	100 kHz
Power supply	$5V_{dc}$
Electronics	line driver
Current consumption without load	100 mA
Outputs	2 signals with rectangular pulses $\overline{A}$, $\overline{B}$ 2 signals with inverted rectangular pulses A, B zero pulse and inverted zero pulse
Pulse displacement between outputs	90°
Protection	IP 54
Max speed	3000 (6000) min^{-1}
Operating temperature	-10°C ÷ 85°C

MOTORS FOR NORMAL CONTINUOUS DUTY (S1) AND NORMAL OPERATING CONDITIONS

Quotation (if submitted): No./Date
Quantity: Units
Efficiency level to IEC 60034-30-1; 2014: IE code
Designation: Type
Output (for pole-changing motors, outputs referred to speeds): kW
Speed (for pole-changing motors, outputs referred to speeds): rpm
Direction of rotation (viewed on drive end)
Mounting arrangement (to IEC 60034-7)
Degree of protection, motor/terminal box (to IEC 60034-5)
Mains voltage: V
Mains frequency: Hz
Method of starting (direct-on-line or Y-Δ)
Location of terminal box
Machine to be driven

ADDITIONAL INFORMATION FOR SPECIAL DESIGNS

Double shaft or non-standard shaft extension
Radial sealing ring
Paint coating
Corrosive protection level
Vibration level
Anti-condensation heating
Temperature detectors (PTC, PTO, ...)
Noise requirements
Mechanical or electrical brake
Special requests

ADDITIONAL INFORMATION FOR SPECIAL DUTIES

S 2: ... min (short-time duty)
S 3: ... % - ... min (intermittent duty)
S 4: ... % - J_M ... kgm^2 - J_{ext} ... kgm^2 (intermittent duty with starting)
S 5: ... % - J_M ... kgm^2 - J_{ext} ... kgm^2 (intermittent duty with electric braking)
S 6: ... % - min (continuous-operation periodic duty with intermittent load)
S 7: .J_M ... kgm^2 - J_{ext} ... kgm^2 (continuous-operation periodic duty with electric braking)
S 8: .J_M ... kgm^2 - J_{ext} ... kgm^2 (continuous-operation periodic duty with speed changes)
S 9: ... kW (continuous duty with non-periodic load and speed variations).
For this duty type suitable full load values should be taken as the overload concept.
S10: p/Δt .... r .... TL (Duty with discrete constant loads).

ADDITIONAL INFORMATION FOR SPECIAL OPERATING CONDITIONS

Starting conditions (no-load or loaded starting)
Shock loads
Load torque curve during run-up (characteristic)
Moment of inertia (J_{ext}) referred to the motor shaft: kgm^2
Description of the type of drive (direct coupling, flat or V-belt, straight or helical gears, sprocket, crank, eccentric cam, etc.)
Radial force (or diameter of drive element): N
Direction of force and point of application (distance from shaft shoulder or width of drive element): mm
Axial force and direction of application (pull/thrust): N
Ambient conditions (e.g. increased humidity, dust accumulation, corrosive gases or vapours, increased or extremely low ambient temperature, outdoor installation, installation at altitudes over 1000 m above sea level, external vibration, etc.)

THREE-PHASE MOTORS

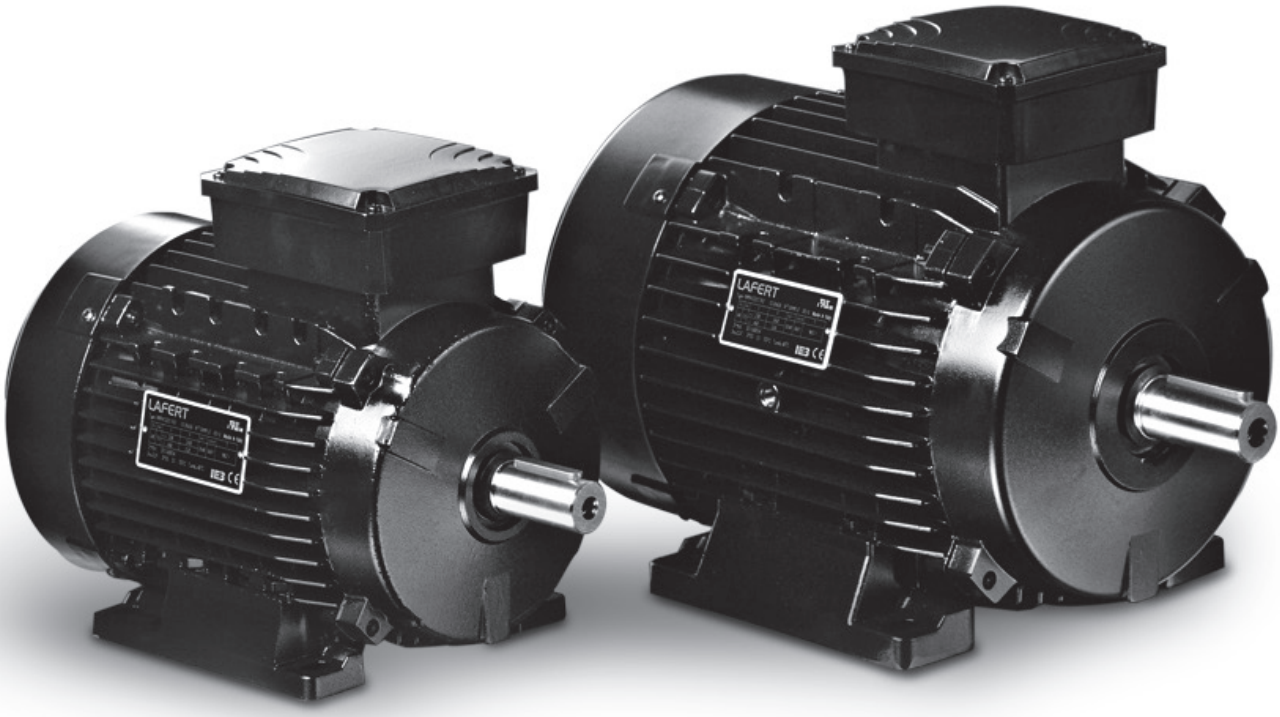

TERMINAL BOX

The location of the terminal box in standard design is on top; on the right or on the left are possible.

Motors 71-160 frame size have removable feet for easy change of terminal box position

For motors with mountings IM B6, IM B7, IM B8, IM V5, IM V6 the location of the terminal box is related to an IM B3 mounting.

The position of the entry openings can be adjusted to suit the existing connection facilities by turning through 90°. Should special accessories be used (temperature detectors, anti-condensation heating, etc.) please enquire.

For motors in standard design, the cable gland does not belong to our scope of delivery.

For plastic terminal boxes, only plastic glands may be used (shock protection).

When using screened leads, a metal terminal box is required.

Direction of cable entries

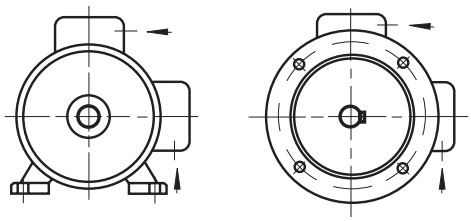

Frame size	Degree of protection	Thread for cable entry		Max. cable section	Terminal thread	Max. external cable diam.
		Metric [1]	Pg [2]	mm²		mm
56 - 71	IP 55	1 x M16/1 x M20	1 x Pg 11/1 x Pg 13.5	2.5	M4	12
80	IP 55	1 x M25/1 x M20	1 x Pg 13.5/1 x Pg 16	2.5	M4	16
90 - 112	IP 55	1 x M25/1 x M20	1 x Pg 13.5/1 x Pg 16	4	M5	16
132	IP 55	2 x M32	2 x Pg 21	4	M5	20
160	IP 55	2 x M40	2 x Pg 29	16	M6	28
180	IP 55	2 X M32/1 X M16		35	M8	28
200	IP 55	2 x M40/1 x M16		35	M8	34
225	IP 55	2 x M50/1 x M16		50	M10	34
250 - 280	IP 55	2 x M50/1 x M16		50	M10	40
315	IP 55	2 x M63/1 x M16 [3]		185	M12	48

1) Pitch 1.5
2) Pg thread to DIN 40 430 (on request)
3) Terminal box with unscrewable cable entry plate

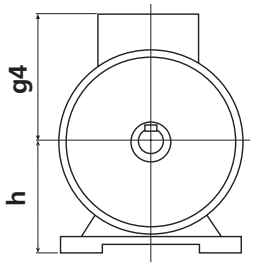

Terminal box on top

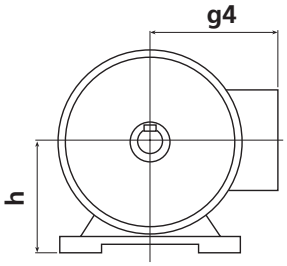

Terminal box at the side

STANDARD DESIGN

Frame size h	g_4	A	B	Material
56	98	91	93	Plastic UL 94 V0
63	103	91	93	Plastic UL 94 V0
71	112	91	93	Plastic UL 94 V0
80	129	111	116	Plastic UL 94 V0
90	138	111	116	Plastic UL 94 V0
100	145	111	116	Plastic UL 94 V0
112	161	111	116	Plastic UL 94 V0
132	198	137	137	Aluminium
160	238	155	155	Aluminium
180	271	162	152	Cast Iron
200	300	207	187	Cast Iron
225	323	207	187	Cast Iron
250	359	248	218	Cast Iron
280	411	248	218	Cast Iron
315	522	320	280	Cast Iron

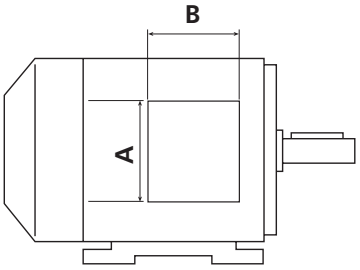

left [1)]

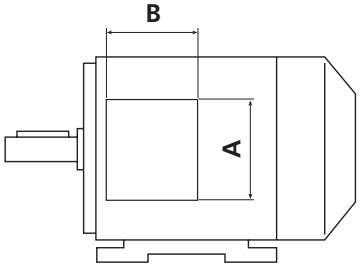

right

1) On frame size 56-63 the terminal box is supplied displaced towards the non-drive end

SPECIAL DESIGN

Frame size h	g_4	A	B	Material
56	100	94	94	Aluminium
63	105	94	94	Aluminium
71	114	94	94	Aluminium
80	139	110	110	Aluminium
90	148	110	110	Aluminium
100	155	110	110	Aluminium
112	171	110	110	Aluminium
180	285	209	220	Cast Iron
200	310	241	246	Cast Iron
225	334	272	254	Cast Iron
250	375	272	254	Cast Iron
280	409	272	254	Cast Iron

CONNECTION DIAGRAMS

Windings of standard three-phase single speed motors can be connected either in star or delta connection.

STAR CONNECTION

A star connection is obtained by connecting W2, U2, V2 terminals to eachother and the U1, V1, W1 terminals to the mains. The phase current and voltage are:

$I_{ph} = I_n$; $U_{ph} = U_n / \sqrt{3}$

where I_n is the line current and U_n the line voltage referred to the star connection.

DELTA CONNECTION

A delta connection is obtained by connecting the end of a phase to the beginning of the next phase.
The phase current I_{ph} and the phase voltage U_{ph} are:

$I_{ph} = I_n / \sqrt{3}$; $U_{ph} = U_n$

where I_n and U_n are referred to the delta connection.

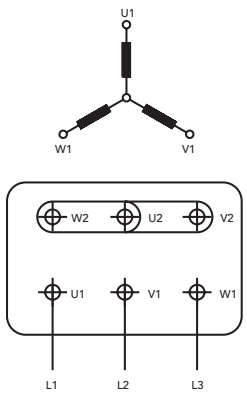

Star connection

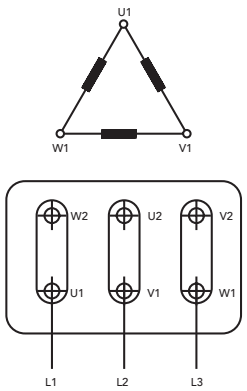

Delta connection

STAR-DELTA STARTING

Star-delta starting allows a peak current reduction. It can be used only when the reduced starting torque obtained is higher than the resistant torque. Actually, it should be noted that the torque of an induction squirrel-cage motor is directly proportional to the square of the voltage. Motors whose rated voltage with delta connection corresponds to the mains voltage, can be started with the star-delta method.

All motors can be supplied with windings designed for star-delta starting (for example: 400 V Δ / 690 V Y).

TWO SPEED MOTORS

Standard pole-changing motors are designed for single voltage and direct-on-line starting.

When the ratio between the two speeds is from 1 to 2, the standard motors have one single winding (Dahlander connection). For the other speeds, the motors have two separate windings.

AM/AMV - two separate windings

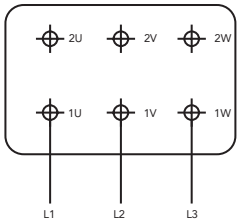

Low speed

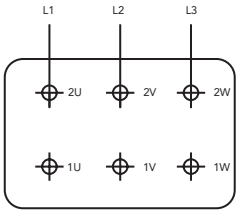

High speed

AM - Dahlander connection Δ/YY

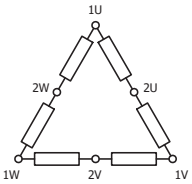

Low speed

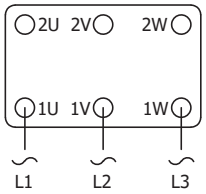

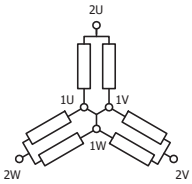

High speed

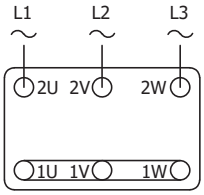

AMV - Dahlander connection Y/YY

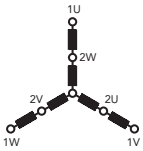

Low speed

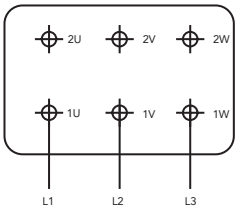

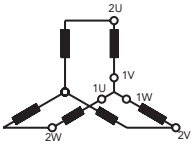

High speed

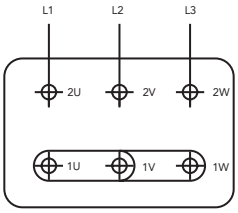

CAGE MOTORS DRIVEN BY FREQUENCY CONVERTERS

Motors frame sizes 90 upwards in standard design are suitable for operation on static frequency converters, taking into account the following remarks:

- Maximum converter output voltage 500V at peak voltages Û ≤ 1460V and du/dt ≤ 13 kV/us. For higher converter output voltages or stresses, a special insulation is required.
- With square characteristic of the load torque, motors can be driven with their rated torque.
- For constant torque, the rated torque of motors with internal cooling must be reduced due to reduced cooling air inlet. Depending on the control range, the use of an external fan would be advisable.
- The motors frame sizes 90 – 112 are suitable for a maximum output frequency of the converter of 60 Hz (e.g. applications with square torque, control range 1:10, such as pumps and fans). For higher frequencies, a special range is available on request. From frame size 132 upwards, motors designed Δ/Y 230/400 V, 50 Hz can be operated in delta with a maximum frequency of 87 Hz (observe mechanical limit speed).
- The motors frame size 56 – 80 can be operated on single-phase converters up to maximum 60 Hz. Special range for operation on three-phase converters with output voltage ≥ 400 V and output frequency > 60 Hz is available on request.

Note: Motors 75 kW, 2 poles and up - insulated bearing are recommended when inverter fed.

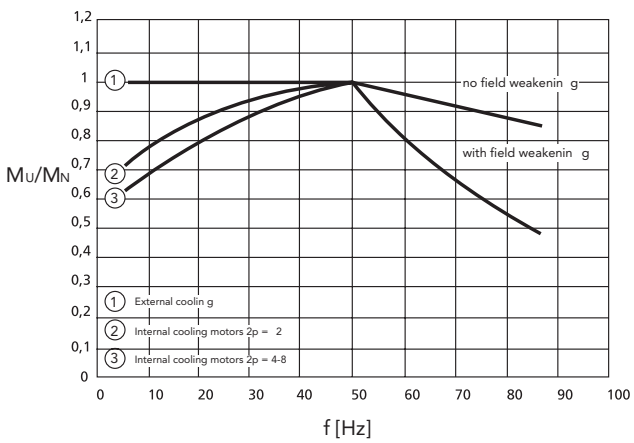

Torque caracteristics of three-phase motors driven by frequency converters.

NOISE

Depending on the operating point and converter type, converter-fed motors produce between approx. 4 - 10 dB(A) higher noise values than when supplied from the mains. For motors driven with a frequency over 50 Hz, more fan noise is produced. We recommend the use of an external fan.

SPARE PARTS

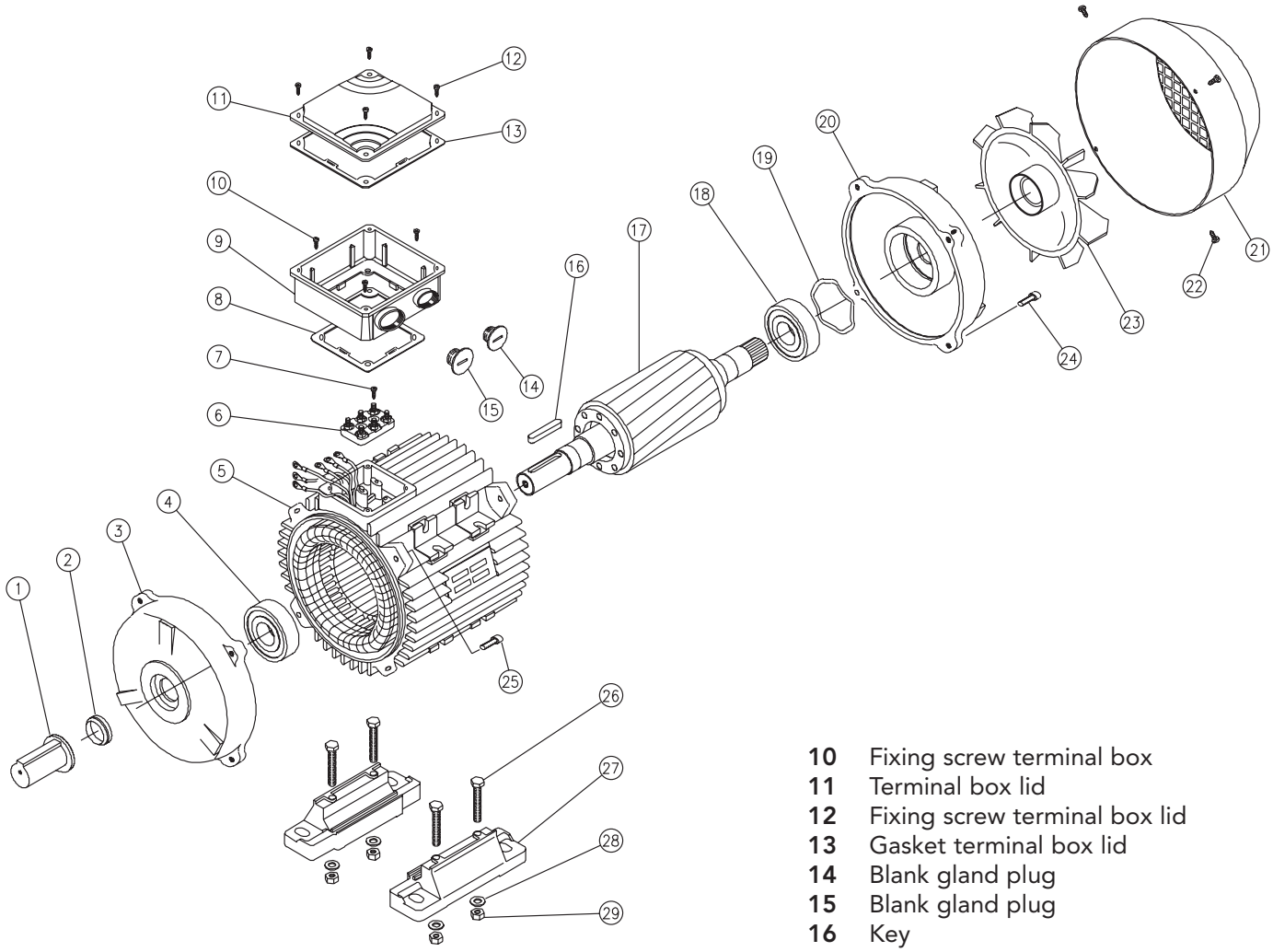

PART DESCRIPTION

1 Shaft protection
2 Dust seal drive end
3 Endshield drive end
4 Bearing drive end
5 Stator frame
6 Terminal board
7 Fixing screw terminal board
8 Gasket terminal box
9 Terminal box
10 Fixing screw terminal box
11 Terminal box lid
12 Fixing screw terminal box lid
13 Gasket terminal box lid
14 Blank gland plug
15 Blank gland plug
16 Key
17 Rotor complete
18 Bearing non-drive end
19 Pre-load washer
20 Endshield non-drive end
21 Fan cover
22 Fixing screw fan cover
23 Fan
24 Fixing bolt endshield non-drive end
25 Fixing bolt endshield drive end
26 Fixing bolt motor feet
27 Motor feet
28 Fixing washer motor feet
29 Fixing nut motor feet

Only motors 71-160 frame size have removable feet for easy change of terminal box position

In enquires and orders for spare parts please state always:
Designation of spare part, motor type, mounting arrangement, motor serial number (Product No. when available)
Enquires and orders cannot be handled without these data.

TYPE DESIGNATION

Apart from other information, it is necessary to specify the exact type designation in all enquiries, when ordering spare parts or replacement motors or when asking for documentary information.

The type designation of our motors comprises 8 points of reference, each of which may consist of several letters and/or numerals. The meaning of each symbol can be seen from the following table. For motors not included in our standard range, special symbols may be used which are not listed here.

Ref. point	Meaning	Description of symbols used for our motors	
1	Type of motor	A	Asynchronous motor
2	Cooling	M	Surface cooled with external fan, cooling fins
		G	Surface cooled without external fan, cooling fins
		MFV	Surface cooled with forced ventilation, cooling fins
3	Type of motor	blank	Three-phase motor, standard efficiency IE1code
		EE	Three-phase motor, high efficiency IE2 code
		HE	Three-phase motor, high efficiency IE2 code 50 - 60 Hz
		PE	Three-phase motor, premium efficiency IE3 code
		PH	Three-phase motor, premium efficiency EISA regulations
		QE	Three-phase motor, super premium efficiency IE4 code
		V	Three-phase two speed motor for driving fans
		I	Special design for three-phase motor driven with frequency converter
4	Shaft centre height	56, 63, 71, 80, 90, 100, 112, 132,160, 180, 200, 225, 250, 280, 315	
5	Frame length	Z	
		S	Mechanical dimension (short)
		M	Mechanical dimension (medium)
		L	Mechanical dimension (long)
6	Mechanical design and output value	A	
		B	
		...	
		Z	
7	Frame material	A	Aluminium frame
		G	Cast iron frame
8	Number of poles	2 - 4/2	
		4 - 8/4	
		6 - 4/6	
		8 - 6/8	

Example

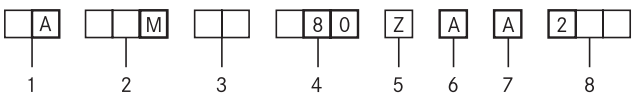

SUPER PREMIUM EFFICIENCY THREE-PHASE MOTORS – IE4

EFFICIENCY LEVEL ACCORDING TO IEC 60034-30-1:2014
EFFICIENCY TESTING METHOD IEC 60034-2-1:2014

NOMINAL FULL LOAD EFFICIENCY ACCORDING TO IE4 CODE @ 400 V - 50 HZ

FOR MAINS VOLTAGE 400 V - 50 HZ

IE4

TEMPERATURE RISE TO CLASS B

Type		kW	HP	rpm	M_N Nm	η 50%	η 75%	η 100%	cos φ	I_N 400V	I_A/I_N	M_A/M_N	M_S/M_N	M_K/M_N	J 10^{-3} kgm²	kg
3000 rpm (2 poles)																
ALUMINIUM DESIGN																
AMQE 80Z AA	**2**	0.75	1	2895	2.5	81.6	84.3	83.5	0.79	1.7	8.1	5.1	4.4	5.4	0.7	9.5
AMQE 80Z BA	**2**	1.1	1.5	2865	3.7	83.8	85.8	85.2	0.76	2.4	8.5	4.9	4.5	4.6	0.9	11.1
AMQE 90S AA	**2**	1.5	2	2910	4.9	85.6	87.2	86.5	0.81	3.1	9.0	4.8	4.2	5.1	1.6	16.4
AMQE 90L BA	**2**	2.2	3	2915	7.3	87.7	89.0	88.0	0.79	4.3	9.8	5.0	4.7	5.4	2.0	18.0
AMQE 100L AA	**2**	3	4	2935	9.8	86.0	88.4	89.1	0.83	5.8	12.3	5.1	4.1	5.6	7.3	26.5
AMQE 112M AA	**2**	4	5.5	2950	13,0	87.9	89.7	90.0	0.83	7.8	16.0	5.3	4.2	5.7	8.6	33.6
AMQE 132S AA	**2**	5.5	7.5	2955	17.8	86.4	89.5	90.9	0.87	10.1	14.4	5.3	4.5	6.8	17.5	58.0
AMQE 132S BA	**2**	7.5	10	2959	24.3	87.8	90.3	91.7	0.82	14.5	12.3	4.1	2.3	5.3	25.0	59.0
AMQE 132M CA	**2**	9.2	12.4	2953	29.9	90.5	91.4	91.8	0.84	16.6	12.8	4.3	3.7	4.8	28.0	68.0
AMQE 160M AA	**2**	9.2	12.4	2970	29.9	88.3	91.0	92.2	0.85	16.9	14.0	5.0	4.3	5.2	53.4	88.9
AMQE 160M BA	**2**	11	15	2965	35.6	89.5	91.7	92.6	0.84	20.3	13.8	5.1	4.5	5.3	53.4	88.9
AMQE 160M CA	**2**	15	20	2965	48.7	89.8	92.0	93.3	0.84	27.8	12.4	5.1	4.5	5.5	64.0	104.0
CAST IRON DESIGN																
AMQE 180M ZG	**2**	22	30	2965	70.9	92.1	94.0	94.0	0.89	38.0	8.2	2.0	1.8	2.3	75	221
AMQE 200L PG	**2**	30	40	2970	96.5	92.6	94.5	94.5	0.89	51.5	7.6	2.0	1.8	2.3	124	260
AMQE 200L RG	**2**	37	50	2970	119.0	92.9	94.8	94.8	0.89	63.2	7.7	2.0	1.8	2.3	139	309
AMQE 225M PG	**2**	45	60	2975	144.5	93.1	95.0	95.0	0.90	76.0	7.7	2.0	1.8	2.3	233	370
AMQE 250M PG	**2**	55	75	2975	176.6	93.4	95.3	95.3	0.90	92.6	7.7	2.0	1.8	2.3	312	520
AMQE 280S G	**2**	75	100	2980	240.4	93.7	95.6	95.6	0.90	126.0	7.1	1.8	1.7	2.7	579	570
AMQE 280M G	**2**	90	125	2982	288.2	93.9	95.8	95.8	0.90	151.0	7.1	1.8	1.7	2.3	675	630
AMQE 315S G	**2**	110	150	2980	352.5	94.1	96.0	96.0	0.90	184.0	7.1	1.8	1.7	2.3	1180	985
AMQE 315M G	**2**	132	180	2980	423.0	94.3	96.2	96.2	0.90	220.0	7.1	1.8	1.7	2.3	1820	1050
AMQE 315L RG	**2**	160	200	2980	512.8	94.4	96.3	96.3	0.91	264.0	7.2	1.8	1.7	2.3	2080	1160
AMQE 315L G	**2**	200	270	2980	640.9	94.6	96.5	96.5	0.91	329.0	7.2	1.8	1.7	2.2	2380	1200

SUPER PREMIUM EFFICIENCY THREE-PHASE MOTORS – IE4

EFFICIENCY LEVEL ACCORDING TO IEC 60034-30-1:2014
EFFICIENCY TESTING METHOD IEC 60034-2-1:2014

NOMINAL FULL LOAD EFFICIENCY ACCORDING TO IE4 CODE @ 400 V - 50 HZ

FOR MAINS VOLTAGE 400 V - 50 HZ

IE4

TEMPERATURE RISE TO CLASS B

Type		kW	HP	rpm	M_N Nm	η 50%	η 75%	η 100%	cos φ	I_N 400V	I_A/I_N	M_A/M_N	M_S/M_N	M_K/M_N	J 10^{-3} kgm²	kg
1500 rpm (4 poles)																
ALUMINIUM DESIGN																
AMQE 90S AA4	**4**	0.75	1	1445	5.0	83.0	85.0	85.7	0,76	1.7	8.4	4.7	2.8	4.3	3.7	16.4
AMQE 90L BA4	**4**	1.1	1.5	1450	7.3	84.1	86.3	86.7	0.72	2.5	8.6	4.3	3.3	4.7	3.9	20.0
AMQE 100L AA4	**4**	1.1	1.5	1473	7.2	85.2	87.8	87.2	0.74	2.5	9.7	4.3	3.3	4.7	8.9	21.5
AMQE 100L BA4	**4**	1.5	2	1470	9.8	86.4	88.4	88.2	0.77	3.2	10.7	4.1	3.1	4.6	10.7	25.3
AMQE 100L CA4	**4**	2.2	3	1472	14.3	87.3	89.2	89.5	0.78	4.6	10.1	4.1	3.5	4.5	14.9	29.0
AMQE 112M BA4	**4**	3	4	1464	19.7	88.8	90.1	90.4	0.79	6.1	9.0	3.6	2.3	4.2	17.4	38.9
AMQE 132S AA4	**4**	4	5.5	1477	25.9	89.0	90.7	91.1	0.79	8.1	10.2	4.6	3.9	4.4	33.0	49.0
AMQE 132S BA4	**4**	5.5	7.5	1476	35.7	90.3	91.7	91.9	0.80	10.8	10.2	3.5	2.8	4.3	45.0	62.0
AMQE 132M CA4	**4**	7.5	10	1472	49.1	90.8	92.3	92.6	0.81	14.5	8.7	2.9	2.1	3.4	57.0	71.0
AMQE 160M AA4	**4**	9.2	12.4	1482	59.8	92.3	93.6	93.0	0.80	17.9	8.6	2.7	2.0	3.5	105.0	105.0
AMQE 160M BA4	**4**	11	15	1482	71.3	91.7	93.0	93.3	0.80	21.4	9.1	2.5	2.0	3.2	120.7	110.0
AMQE 160L CA4	**4**	15	20	1480	97.4	91.8	93.3	93.9	0.80	29.0	8.1	1.9	1.3	3.0	135.0	125.0
CAST IRON DESIGN																
AMQE 180M ZG	**4**	18.5	25	1480	119.4	92.3	94.2	94.2	0.86	33.0	7.8	2.0	1.9	2.3	139	181
AMQE 180L ZG	**4**	22	30	1480	142.0	92.6	94.5	94.5	0.86	39.1	7.8	2.0	1.9	2.3	158	209
AMQE 200L RG	**4**	30	40	1480	193.6	93.0	94.9	94.9	0.86	53.1	7.3	2.0	1.9	2.3	262	280
AMQE 225S PG	**4**	37	50	1485	237.9	93.3	95.2	95.2	0.86	65.2	7.4	2.0	1.9	2.3	406	373
AMQE 225M PG	**4**	45	60	1485	289.4	93.5	95.4	95.4	0.86	80.2	7.4	2.0	1.9	2.3	469	390
AMQE 250M PG	**4**	55	75	1485	353.7	93.8	95.7	95.7	0.86	96.5	7.4	2.2	2.1	2.3	660	553
AMQE 280S G	**4**	75	100	1490	480.7	94.1	96.0	96.0	0.88	128.0	6.9	2.0	1.9	2.3	1120	655
AMQE 280M G	**4**	90	125	1490	576.8	94.2	96.1	96.1	0.88	154.0	6.9	2.0	1.9	2.3	1460	730
AMQE 315S G	**4**	110	150	1490	705.0	94.4	96.3	96.3	0.89	185.0	7.0	2.0	1.9	2.2	3110	980
AMQE 315M G	**4**	132	180	1490	846.0	94.5	96.4	96.4	0.89	222.0	7.0	2.0	1.9	2.2	3620	1031
AMQE 315L RG	**4**	160	200	1490	1026.0	94.7	96.6	96.6	0.89	269.0	7.1	2.0	1.9	2.2	4130	1093
AMQE 315L G	**4**	200	270	1490	1282.0	94.8	96.7	96.7	0.90	332.0	7.1	2.0	1.9	2.2	4730	1190

SUPER PREMIUM EFFICIENCY THREE-PHASE MOTORS – IE4

EFFICIENCY LEVEL ACCORDING TO IEC 60034-30-1:2014
EFFICIENCY TESTING METHOD IEC 60034-2-1:2014

NOMINAL FULL LOAD EFFICIENCY ACCORDING TO IE4 CODE @ 400 V - 50 HZ

FOR MAINS VOLTAGE 400 V - 50 HZ

IE4

TEMPERATURE RISE TO CLASS B

Type		kW	HP	rpm	M_N Nm	η 50%	η 75%	η 100%	cos φ	I_N 400V	I_A/I_N	M_A/M_N	M_S/M_N	M_K/M_N	J 10^{-3} kgm²	kg
1000 rpm (6 poles)																
ALUMINIUM DESIGN																
AMQE 100L AA	6	0.75	1	970	7.5	82.5	84.6	82.7	0.66	2.0	5.5	2.3	2.3	2.8	9.7	23.0
AMQE 100L BA	6	1.1	1.5	966	10.9	83.1	84.9	84.5	0.65	2.9	5.2	2.4	2.0	2.8	10.7	25.0
AMQE 100L CA	6	1.5	2	967	14.9	85.3	86.6	85.9	0.70	3.6	5.9	2.6	1.9	2.8	13.3	28.0
AMQE 112M AA	6	2.2	3	968	21.8	86.7	87.9	87.4	0.68	5.3	6.7	2.3	1.8	3.0	23.1	36.5
AMQE 132S AA	6	3	4	975	29.6	87.5	89.0	88.6	0.70	7.0	6.5	3.0	2.0	2.7	44.4	46.0
AMQE 132M BA	6	4	5.5	976	39.4	87.6	89.2	89.5	0.68	9.5	6.2	2.0	1.7	2.5	54.1	48.0
AMQE 160M AA	6	5.5	7.5	981	53.6	88.2	90.2	90.5	0.78	10.3	7.9	1.7	1.0	3.1	130.0	105.0
AMQE 160L BA	6	7.5	10	981	73.8	89.1	91.2	91.3	0.73	16.3	10.4	2.1	3.1	3.5	136.0	115.0
CAST IRON DESIGN																
AMQE 180L ZG	6	15	20	985	145.4	91.0	92.9	92.9	0.81	28.8	7 .3	2.0	2.0	2.1	207	245
AMQE 200L PG	6	18.5	25	985	179.4	91.5	93.4	93.4	0.81	35.3	7.3	2.0	2.0	2.1	315	265
AMQE 200L RG	6	22	30	985	213.3	91.8	93.7	93.7	0.81	41.8	7.4	2.0	2.0	2.1	360	285
AMQE 225M PG	6	30	40	990	289.4	92.3	94.2	94.0	0.83	55.4	6.9	2.0	2.0	2.1	547	335
AMQE 250M PG	6	37	50	990	356.9	92.6	94.5	94.5	0.84	67.3	7.1	2.0	2.0	2.1	843	471
AMQE 280S G	6	45	60	990	434.1	92.9	94.8	94.8	0.85	80.6	7.3	2.0	2.0	2.0	1390	530
AMQE 280M G	6	55	75	990	530.6	93.2	95.1	95.1	0.86	97.1	7.3	2.0	2.0	2.0	1650	670
AMQE 315S G	6	75	100	990	723.5	93.5	95.4	95.4	0.84	135.0	6.6	2.0	2.0	2.0	4110	960
AMQE 315M G	6	90	125	990	868.2	93.7	95.6	95.6	0.85	160.0	6.7	2.0	2.0	2.0	4780	1070
AMQE 315L RG	6	110	150	990	1061.0	93.9	95.8	95.8	0.85	195.0	6.7	2.0	2.0	2.0	5450	1160
AMQE 315L G	6	132	180	990	1273.0	94.1	96.0	96.0	0.86	231.0	6.8	2.0	2.0	2.0	6120	1250

PREMIUM EFFICIENCY THREE-PHASE MOTORS – IE3

EFFICIENCY LEVEL ACCORDING TO IEC 60034-30-1:2014
EFFICIENCY TESTING METHOD IEC 60034-2-1;2014

NOMINAL FULL LOAD EFFICIENCY ACCORDING TO IE3 CODE @ 400 V - 50 HZ

FOR MAINS VOLTAGE 400 V - 50 HZ

IE3

TEMPERATURE RISE TO CLASS B

Type		kW	HP	rpm	M_N Nm	IE3 η 50%	IE3 η 75%	IE3 η 100%	cos φ	I_N 400V	I_A/I_N	M_A/M_N	M_S/M_N	M_K/M_N	J 10^{-3} kgm²	kg
3000 rpm (2 poles)																
ALUMINIUM DESIGN																
AMPE 56Z BA	**2**	0.12	0.16	2650	0.4	49.1	55.8	60.8	0.68	0.45	3.5	3.4	3.4	3.5	0.09	3.4
AMPE 56Z CA	**2***	0.18	0.24	2650	0.6	57.0	61.8	65.9	0.73	0.60	3.9	3.8	3.8	3.9	0.1	3.5
AMPE 63Z AA	**2**	0.18	0.25	2735	0.6	55.4	61.9	65.9	0.73	0.55	3.7	3.0	3.0	3.1	0.14	3.6
AMPE 63Z BA	**2**	0.25	0.33	2810	0.9	57.0	65.3	69.7	0.62	0.86	4.5	3.2	3.2	3.3	0.17	4.1
AMPE 63Z CA	**2***	0.37	0.50	2720	1.3	65.4	69.9	73.8	0.73	1.05	4.6	3.4	3.3	3.4	0.2	4.4
AMPE 71Z XA	**2**	0.37	0.50	2810	1.3	70.3	74.2	73.8	0.76	0.95	4.7	3.6	3.4	3.6	0.32	5.8
AMPE 71Z YA	**2**	0.55	0.75	2850	1.9	73.3	77.7	77.8	0.73	1.40	4.8	3.2	3.1	3.3	0.37	6.2
AMPE 71Z AA	**2***	0.75	1	2880	2.5	76.5	80.8	80.7	0.70	1.9	5.5	3.1	3.0	3.2	0.7	8.2
AMPE 80Z AA	**2**	0.75	1	2910	2.5	77.8	81.2	82.0	0.78	1.7	8.9	4.7	4.5	4.8	0.7	9.5
AMPE 80Z BA	**2**	1.1	1.5	2870	3.7	78.7	81.7	82.7	0.76	2.4	9.3	5.0	4.9	5.3	0.9	11.1
AMPE 80Z CA	**2***	1.5	2	2810	5.1	78.8	82.2	84.2	0.76	3.6	7.8	4.9	3.7	4.3	1.1	13.5
AMPE 90S AA	**2**	1.5	2	2875	5.0	83.2	84.8	84.2	0.85	3.0	8.4	3.6	3.2	3.8	1.6	14.0
AMPE 90L BA	**2**	2.2	3	2880	7.3	85.0	86.2	86.5	0.82	4.6	9.2	4.0	3.8	4.2	1.8	16.0
AMPE 90L DA	**2***	3	4	2865	10.0	85.2	86.3	87.1	0.80	6.3	8.7	4.5	4.0	4.6	2.0	18.0
AMPE 100L AA	**2**	3	4	2900	9.9	82.3	85.8	87.1	0.89	5.6	8.8	5.5	3.5	4.5	4.1	22.8
AMPE 100L BA	**2***	4	5.5	2920	13.1	85.4	87.2	88.1	0.81	8.2	10.9	6.1	5.2	5.7	7.3	26.5
AMPE 112M AA	**2**	4	5.5	2910	13.1	86.8	87.8	88.1	0.93	7.0	9.6	3.6	3.0	4.0	6.5	27.4
AMPE 112M BA	**2***	5.5	7.5	2935	17.9	85.6	88.3	89.2	0.87	10.2	11.2	4.2	3.5	4.3	8.6	33.6
AMPE 112M CA	**2***	7.5	10	2930	24.5	88.0	89.7	90.1	0.84	14.4	10.4	4.5	3.5	4.6	10.5	36.0
AMPE 132S ZA	**2**	5.5	7.5	2920	18.0	88.0	88.5	89.2	0.90	10.0	8.9	3.0	2.5	3.6	14.0	46.0
AMPE 132S TA	**2**	7.5	10	2910	24.6	88.6	89.2	90.1	0.92	13.1	8.9	3.0	2.6	3.6	16.0	53.0
AMPE 132M ZA	**2**	9.2	12.4	2930	30.0	88.6	89.8	90.7	0.89	16.5	10.1	3.7	3.3	4.0	17.5	58.0
AMPE 132M RA	**2***	11	15	2935	35.8	90.0	90.8	91.2	0.89	19.9	9.7	4.4	3.5	4.6	25.0	59.0
AMPE 132M TA	**2***	15	20	2915	49.2	91.0	92.2	91.9	0.88	26.8	9.6	3.7	2.6	3.8	28.0	68.0
AMPE 160M YA	**2**	11	15	2950	35.6	87.4	89.8	91.2	0.89	19.7	9.1	4.0	3.0	4.2	51.7	87.8
AMPE 160M ZA	**2**	15	20	2940	48.7	91.0	91.3	91.9	0.89	26.7	9.7	4.7	3.5	4.8	53.4	88.9
AMPE 160L ZA	**2**	18.5	25	2950	59.9	91.6	92.8	92.4	0.88	33.0	10.7	4.6	3.1	4.7	64.0	104.0
AMPE 160L TA	**2***	22	30	2950	71.3	92.2	93.7	92.7	0.87	39.4	10.4	4.5	3.0	4.6	64.0	104.0
CAST IRON DESIGN																
AMPE 180M ZG	**2**	22	30	2955	71.1	90.8	92.7	92.7	0.89	38.5	8.2	2.0	1.8	2.3	75	182
AMPE 200L PG	**2**	30	40	2960	96.8	91.4	93.3	93.3	0.89	52.1	7.6	2.0	1.8	2.3	124	246
AMPE 200L RG	**2**	37	50	2960	119.4	91.8	93.7	93.7	0.89	64.0	7.6	2.0	1.8	2.3	139	265
AMPE 225M PG	**2**	45	60	2965	144.9	92.1	94.0	94.0	0.90	76.8	7.7	2.0	1.8	2.3	233	322
AMPE 250M PG	**2**	55	75	2970	176.9	92.4	94.3	94.3	0.90	93.5	7.7	2.0	1.8	1.8	312	413

* Higher output (Progressive motor)

PREMIUM EFFICIENCY THREE-PHASE MOTORS – IE3

EFFICIENCY LEVEL ACCORDING TO IEC 60034-30-1:2014
EFFICIENCY TESTING METHOD IEC 60034-2-1;2014

NOMINAL FULL LOAD EFFICIENCY ACCORDING TO IE3 CODE @ 400 V - 50 HZ

FOR MAINS VOLTAGE 400 V - 50 HZ

IE3

TEMPERATURE RISE TO CLASS B

Type		kW	HP	rpm	M_N Nm	η 50%	η 75%	η 100%	cos φ	I_N 400V	I_A/I_N	M_A/M_N	M_S/M_N	M_K/M_N	J 10^{-3} kgm²	kg
1500 rpm (4 poles)																
ALUMINIUM DESIGN																
AMPE 63Z AA	**4**	0.12	0.16	1370	0.8	58.3	64.1	64.8	0.70	0.4	2.4	2.0	1.9	2.0	0.2	3.3
AMPE 63Z BA	**4**	0.18	0.25	1360	1.3	61.8	67.0	69.9	0.66	0.6	2.3	1.9	1.8	1.9	0.3	4.1
AMPE 71Z AA	**4**	0.25	0.33	1420	1.8	69.9	74.6	73.5	0.70	0.7	3.2	1.9	1.8	2.0	0.6	5.7
AMPE 71Z BA	**4**	0.37	0.50	1410	2.6	73.2	76.5	77.3	0.70	1.0	3.3	2.2	2.1	2.2	0.8	6.0
AMPE 80Z XA	**4**	0.55	0.75	1440	3.8	75.6	80.7	80.8	0.75	1.3	6.0	2.8	2.5	2.6	1.4	8.2
AMPE 80Z AA	**4**	0.75	1	1435	5.0	80.7	81.5	82.5	0.74	1.8	5.5	2.7	2.6	2.8	2.5	11.0
AMPE 90S AA	**4**	1.1	1.5	1440	7.3	83.3	84.3	84.1	0.75	2.5	7.1	4.3	3.4	4.4	3.6	15.8
AMPE 90L BA	**4**	1.5	2	1430	10.0	84.1	85.2	85.3	0.72	3.6	6.6	4.3	3.8	4.4	3.7	16.4
AMPE 90L CA	**4**	1.8	2.4	1430	12.0	83.5	86.1	86.0	0.69	4.5	8.5	4.3	3.7	4.4	3.9	20.0
AMPE 100L AA	**4**	2.2	3	1455	14.5	86.0	87.0	86.7	0.78	4.8	9.0	3.1	3.0	3.5	8.9	21.5
AMPE 100L BA	**4**	3	4	1460	19.5	86.1	87.8	87.7	0.82	6.0	8.5	2.5	2.4	3.0	14.9	29.0
AMPE 112M BA	**4**	4	5.5	1450	26.4	87.2	88.3	88.6	0.80	8.2	8.5	2.7	2.4	3.5	16.4	36.0
AMPE 132S AA	**4**	5.5	7.5	1460	35.9	90.6	91.3	89.6	0.84	10.6	8.6	2.5	2.1	3.5	33.0	49.0
AMPE 132M BA	**4**	7.5	10	1465	48.9	90.8	91.5	90.4	0.84	14.2	8.6	2.5	2.1	3.5	36.0	54.0
AMPE 132M CA	**4**	9.2	12.4	1460	60.1	91.0	91.6	91.0	0.84	17.3	8.7	2.4	2.0	3.6	45.0	62.0
AMPE 132M DA	**4**	11	15	1470	71.7	90.6	91.5	91.4	0.8	21.8	8.7	2.4	2.0	3.6	57.0	71.0
AMPE 160M AA	**4**	11	15	1475	71.3	91.6	92.4	91.4	0.83	21.0	8.2	2.1	1.7	2.8	89.0	100.0
AMPE 160L BA	**4**	15	20	1465	97.8	92.2	92.7	92.1	0.83	28.5	7.8	2.3	2.0	3.1	105.0	105.0
AMPE 160L CA	**4**	18.5	25	1470	122	92.0	92.8	92.6	0.78	37.0	7.1	2.1	1.9	2.6	120.7	110.0
AMPE 160L DA	**4**	22	30	1470	143.9	92.4	93.1	93.0	0.81	41.0	8.0	2.2	1.9	3.0	128.1	115.0
CAST IRON DESIGN																
AMPE 180M ZG	**4**	18.5	25	1470	120.2	90.7	92.6	92.6	0.86	33.5	7.8	2.0	1.9	2.3	139	181
AMPE 180L ZG	**4**	22	30	1470	142.9	91.1	93.0	93.0	0.86	39.7	7.8	2.0	1.9	2.3	158	209
AMPE 200L RG	**4**	30	40	1475	194.2	91.7	93.6	93.6	0.86	53.8	7.3	2.0	1.9	2.3	262	284
AMPE 225S PG	**4**	37	50	1485	237.9	92.0	93.9	93.9	0.86	66.1	7.4	2.0	1.9	2.3	406	328
AMPE 225M PG	**4**	45	60	1485	289.4	92.3	94.2	94.2	0.86	80.2	7.4	2.0	1.9	2.3	469	363
AMPE 250M PG	**4**	55	75	1485	353.7	92.7	94.6	94.6	0.86	97.6	7.4	2.2	2.1	2.3	660	442

* Higher output (Progressive motor)

PREMIUM EFFICIENCY THREE-PHASE MOTORS – IE3

EFFICIENCY LEVEL ACCORDING TO IEC 60034-30-1:2014
EFFICIENCY TESTING METHOD IEC 60034-2-1;2014

NOMINAL FULL LOAD EFFICIENCY ACCORDING TO IE3 CODE @ 400 V - 50 HZ

FOR MAINS VOLTAGE 400 V - 50 HZ

IE3

TEMPERATURE RISE TO CLASS B

Type		kW	HP	rpm	M_N Nm	η 50%	η 75%	η 100%	cos φ	I_N 400V	I_A/I_N	M_A/M_N	M_S/M_N	M_K/M_N	J 10^{-3} kgm²	kg
1000 rpm (6 poles)																
ALUMINIUM DESIGN																
AMPE 71Z AA	**6**	0.18	0.25	910	2.0	60.9	66.1	63.9	0.63	0.6	2.2	1.6	1.5	1.6	1.0	6.1
AMPE 71Z BA	**6**	0.25	0.33	900	2.7	61.4	66.2	68.6	0.64	0.9	2.5	1.7	1.6	1.7	1.2	6.6
AMPE 80Z AA	**6**	0.37	0.5	940	3.8	70.9	72.1	73.5	0.72	1.0	2.7	1.6	1.6	2.1	1.8	8.0
AMPE 90S XA	**6**	0.55	0.75	940	5.6	73.4	77.2	77.2	0.67	1.5	4.5	1.6	1.5	1.8	4.8	15.0
AMPE 90S AA	**6**	0.75	1	940	7.6	78.1	79.2	78.9	0.62	2.2	4.6	1.7	1.6	1.8	6.0	18.1
AMPE 90L BA	**6***	1.1	1.5	935	11.2	79.1	81.2	81.0	0.64	3.1	4.2	1.8	1.7	2.3	6.5	19.0
AMPE 100L AA	**6**	1.1	1.5	960	10.9	78.9	81.3	81.0	0.65	3.0	6.2	2.2	1.8	2.8	11.6	25.0
AMPE 100L BA	**6**	1.5	2	920	15.6	81.1	82.7	82.5	0.68	3.8	5.7	1.7	1.3	2.3	14.2	26.0
AMPE 112M BA	**6**	2.2	3	920	22.8	83.3	85.1	84.3	0.68	5.4	5.3	2.0	1.8	2.4	20.1	34.2
AMPE 132S YA	**6**	3	4	975	29.4	84.1	85.8	85.6	0.65	8.0	5.5	2.1	1.9	3.1	37.7	42.0
AMPE 132M YA	**6**	4	5.5	975	39.2	85.2	87.1	86.8	0.70	9.6	5.4	2.2	1.7	3.2	44.4	46.0
AMPE 132M TA	**6***	5.5	7.5	975	53.9	87.1	88.1	88.0	0.64	14.2	5.4	2.1	1.8	2.9	54.1	48.0
AMPE 160M YA	**6**	5.5	7.5	975	53.9	87.5	88.5	88.0	0.77	11.8	8.6	2.2	1.8	2.8	103.0	84.0
AMPE 160M ZA	**6**	7.5	10	980	73.1	88.3	89.3	89.1	0.78	15.7	8.7	2.4	1.9	3.1	132.0	97.0
AMPE 160L ZA	**6**	9.2	12.4	970	87.6	88.9	90.1	89.8	0.74	19.9	8.3	3.1	2.2	3.5	136.0	105.0
AMPE 160L TA	**6**	11	15	970	108.3	89.1	90.4	90.3	0.78	22.9	8.0	2.7	2.4	3.2	136.0	105.0
CAST IRON DESIGN																
AMPE 180L ZG	**6**	15	20	978	146.5	89.4	91.2	91.2	0.81	28.2	7.3	2.0	2.0	2.1	207	197
AMPE 200L PG	**6**	18.5	25	980	180.3	89.9	91.7	91.7	0.81	34.7	7.3	2.0	2.0	2.1	315	234
AMPE 200L RG	**6**	22	30	980	214.4	90.4	92.2	92.2	0.81	41.0	7.4	2.0	2.0	2.1	360	251
AMPE 225M PG	**6**	30	40	980	292.3	91.0	92.9	92.9	0.83	54.1	6.9	2.0	2.0	2.1	547	308
AMPE 250M PG	**6**	37	50	985	358.7	91.4	93.3	93.3	0.84	65.7	7.1	2.0	2.0	2.1	843	383
AMPE 280S G	**6**	45	60	985	436.3	91.8	93.7	93.7	0.85	78.6	7.3	2.0	2.0	2.0	1390	501
AMPE 280M G	**6**	55	75	985	533.2	92.2	94.1	94.1	0.86	94.6	7.3	2.0	2.0	2.0	1650	573

* Higher output (Progressive motor)

PREMIUM EFFICIENCY THREE-PHASE MOTORS – IE3

EFFICIENCY LEVEL ACCORDING TO EISA
EFFICIENCY TESTING METHOD CSA C390-10
VERIFIED BY UL UNDERWRITERS LABORATORIES INC.

EFFICIENCY LEVEL ACCORDING TO IEC 60034-30-1;2014
EFFICIENCY TESTING METHOD IEC 60034-2-1;2014

FOR MAINS VOLTAGE
460 V - 60 HZ

IE3 ENERGY c UL us

TEMPERATURE RISE TO CLASS B

Type		kW	HP	rpm	M_N Nm	η 50 %	η 75 %	η 100 %	cos φ	I_N 460 V	I_A/I_N	M_A/M_N	M_S/M_N	M_K/M_N	J 10^{-3} kgm²	kg
3600 rpm (2 poles)																
AMPH 80Z AA2	**2**	0.75	1	3525	2.0	81.2	84.2	77.0	0.77	1.5	9.4	5.2	4.1	5.5	0.7	9.5
AMPH 80Z BA2	**2**	1.1	1.5	3490	3.0	81.9	84.6	84.0	0.80	2.0	8.3	4.4	3.9	4.5	0.9	11.1
AMPH 80Z CA2	**2***	1.5	2	3460	4.1	82.1	84.9	85.5	0.77	2.8	8.2	4.7	3.6	4.4	1.1	13.5
AMPH 90S AA	**2**	1.5	2	3515	4.1	81.2	84.7	85.5	0.78	2.8	10.0	3.7	3.6	4.3	1.6	16.4
AMPH 90L BA	**2**	2.2	3	3480	6.0	83.6	86.1	86.5	0.84	3.8	8.5	4.4	4	4.4	1.8	18.3
AMPH 90L DA	**2***	3	4	3510	8.2	85.9	88.6	88.5	0.82	5.3	9.4	4.1	3.9	4.3	2.0	18.0
AMPH 100L AA	**2**	3	4	3515	8.2	85.8	88.1	88.5	0.86	4.9	10.5	5.6	5.3	5.3	4.0	23.6
AMPH 100L BA	**2***	3.7	5	3540	10.0	86.2	88.0	88.5	0.75	7.0	9.6	4.9	4.3	4.9	7.3	26.5
AMPH 100L CA	**2***	4	5.5	3530	10.8	86.6	88.1	88.5	0.76	7.4	9.0	4.5	4.0	4.5	7.3	26.5
AMPH 112M AA	**2**	3.7	5	3535	10.0	84.0	87.6	88.5	0.90	5.8	11.0	3.4	1.9	4.0	6.5	27.4
AMPH 112M BA	**2**	4	5.5	3520	10.9	85.3	88.0	88.5	0.91	6.2	10.5	3.2	1.7	3.8	6.5	27.4
AMPH 112M CA	**2***	5.5	7.5	3530	14.9	86.2	89.0	89.5	0.86	8.9	14.4	4.5	2.5	4.3	8.6	35.5
AMPH 112M DA	**2***	7.5	10	3530	20.3	87.9	90.1	90.2	0.88	11.9	11.0	4.5	2.6	4.7	10.5	36.5
AMPH 132S ZA	**2**	5.5	7.5	3540	14.8	87.3	89.6	89.5	0.88	8.8	10.2	3.0	2.6	3.3	20.5	42.0
AMPH 132S TA	**2**	7.5	10	3540	20.2	88.0	90.3	90.2	0.87	12.0	12.0	3.4	2.9	3.9	22.8	48.0
AMPH 132M TA	**2**	9.2	12.4	3545	24.8	87.7	90.1	90.2	0.88	14.5	10.0	4.0	3.5	4.7	25.0	50.0
AMPH 132M RA	**2***	11	15	3535	29.7	87.5	90.4	91.0	0.86	17.7	10.7	4.0	3.5	4.7	25.0	60.1
AMPH 132M ZA	**2***	15	20	3530	40.6	89.6	90.7	91.0	0.88	23.5	9.7	4.1	3.4	4.2	28.0	68.0
AMPH 160M YA	**2**	11	15	3550	29.6	86.6	90.0	91.0	0.89	17.0	10.8	3.5	2.5	4.5	51.7	90.0
AMPH 160M ZA	**2**	15	20	3555	40.3	90.1	92.0	91.0	0.88	23.4	10.0	3.5	3.1	4.5	53.4	92.0
AMPH 160L ZA	**2**	18.5	25	3555	49.7	90.0	92.2	91.7	0.82	31.0	12.5	4.6	3.3	6.0	64.0	108.0
AMPH 160L TA	**2**	22	30	3540	59.3	90.7	92.5	91.7	0.84	35.8	10.6	3.9	2.8	5.0	64.0	108.0

* Higher output (Progressive motor)

PREMIUM EFFICIENCY THREE-PHASE MOTORS – IE3

EFFICIENCY LEVEL ACCORDING TO EISA
EFFICIENCY TESTING METHOD CSA C390-10
VERIFIED BY UL UNDERWRITERS LABORATORIES INC.

EFFICIENCY LEVEL ACCORDING TO IEC 60034-30-1;2014
EFFICIENCY TESTING METHOD IEC 60034-2-1;2014

FOR MAINS VOLTAGE
400 V - 50 HZ

TEMPERATURE RISE TO CLASS B

Type		kW	HP	rpm	M_N Nm	η 50 %	η 75 %	η 100 %	cos φ	I_N 460 V	I_A/I_N	M_A/M_N	M_S/M_N	M_K/M_N	J 10^{-3} kgm²	kg
1800 rpm (4 poles)																
AMPH 80 Z AA	**4**	0.75	1	1740	4.1	82.6	86.1	85.5	0.76	1.45	6.5	3.4	2.5	3.5	2.5	11.0
AMPH 90S AA	**4**	1.1	1.5	1745	6.0	82.8	85.6	86.5	0.71	2.2	8.2	4.4	4.3	4.6	3.7	18.8
AMPH 90L BA	**4**	1.5	2	1735	8.3	83.5	86.2	86.5	0.74	2.9	7.5	3.8	3.7	4.0	3.7	18.8
AMPH 90L CA	**4**	1.8	2.4	1730	9.9	85.2	86.7	86.5	0.68	3.8	7.8	3.9	3.8	4.1	3.7	18.8
AMPH 100L AA	**4**	2.2	3	1760	11.9	87.8	88.9	89.5	0.81	3.8	8.3	2.8	2.7	3.3	10.7	25.0
AMPH 100L BA	**4**	3	4	1765	16.2	88.2	89.1	89.5	0.80	5.3	8.2	2.7	2.5	3.2	14.9	28.0
AMPH 112M AA	**4**	3.7	5	1765	20.0	87.3	89.3	89.5	0.80	6.5	9.6	3.1	2.5	4.6	16.4	35.7
AMPH 112M BA	**4**	4	5.5	1760	21.7	87.7	89.4	89.5	0.81	6.9	9	2.9	2.3	4.3	16.4	35.7
AMPH 132S AA	**4**	5.5	7.5	1770	35.9	91.0	92.1	91.7	0.83	9.0	9.0	2.4	2.0	3.8	33.0	49.0
AMPH 132M BA	**4**	7.5	10	1765	40.5	90.8	91.5	91.7	0.83	12.5	9.0	2.4	2.0	3.8	36.0	54.0
AMPH 132M CA	**4**	9.2	12.4	1765	49.8	90.9	91.6	91.7	0.83	15.2	9.2	2.2	1.9	3.7	45.0	62.0
AMPH 132M DA	**4***	11	15	1770	59.7	91.2	92.0	92.4	0.81	18.5	8.5	3.5	3.0	4.0	57.0	71.0
AMPH 160M AA	**4**	11	15	1770	59.3	91.0	92.5	92.4	0.80	18.6	8.5	2.5	1.8	3.3	89.0	100.0
AMPH 160L BA	**4**	15	20	1770	81.2	91.9	93.0	93.0	0.82	24.8	8.9	2.7	2.4	3.7	105.0	105.0
AMPH 160L CA	**4**	18.5	25	1770	99.8	92.0	93.4	93.6	0.78	32.5	8.0	2.5	2.2	3.3	120.7	110.0
AMPH 160L DA	**4**	22	30	1770	119.0	92.9	93.7	93.6	0.83	35.6	7.8	2.5	2.0	3.3	135.0	127.0

* Higher output (progressive motor)

PREMIUM EFFICIENCY THREE-PHASE MOTORS – IE3

EFFICIENCY LEVEL ACCORDING TO EISA
EFFICIENCY TESTING METHOD CSA C390-10
VERIFIED BY UL UNDERWRITERS LABORATORIES INC.

EFFICIENCY LEVEL ACCORDING TO IEC 60034-30-1;2014
EFFICIENCY TESTING METHOD IEC 60034-2-1;2014

FOR MAINS VOLTAGE
460 V - 60 HZ

TEMPERATURE RISE TO CLASS B

Type		kW	HP	rpm	M_N Nm	η 50 %	η 75 %	η 100 %	cos φ	I_N 460 V	I_A/I_N	M_A/M_N	M_S/M_N	M_K/M_N	J 10^{-3} kgm²	kg
1200 rpm (6 poles)																
AMPH 90S AA	**6**	0.75	1	1155	6.2	78.5	81.8	82.5	0.58	2.05	4.5	1.8	1.7	2.1	6.0	18.1
AMPH 100L AA	**6***	1.1	1.5	1175	8.9	85.8	87.8	87.5	0.64	2.5	6.1	2.1	1.6	2.2	13.3	28.0
AMPH 112M AA	**6**	1.1	1.5	1180	8.9	86.0	88.0	87.5	0.63	2.5	6.5	2.8	2.0	2.9	20.1	34.2
AMPH 112M BA	**6**	1.5	2	1180	12.1	85.6	88.1	88.5	0.63	3.5	6.2	2.9	2.5	3.1	23.1	36.5
AMPH 112M CA	**6**	1.8	2.4	1170	14.7	86.3	88.3	88.5	0.66	3.9	6.4	3.0	2.6	3.2	23.1	36.5
AMPH 132S AA	**6**	2.2	3	1175	17.9	87.4	89.6	89.5	0.65	4.7	6.0	2.3	1.7	3.0	45	46
AMPH 132S BA	**6**	3	4	1175	24.4	88.2	89.8	89.5	0.66	6.4	6.5	2.5	1.7	3.2	45	48
AMPH 132M CA	**6**	4	5.5	1175	32.5	89.5	90.0	89.5	0.7	7.9	6.2	2.1	1.6	2.9	54	50
AMPH 160M AA	**6**	5.5	7.5	1180	44.5	88.4	90.4	91	0.78	9.8	8.2	2.8	2.6	3.5	103	84
AMPH 160M BA	**6**	7.5	10	1180	60.7	89.4	91.1	91	0.76	13.6	8.5	3.1	2.8	3.4	130	105
AMPH 160L CA	**6**	9.2	12.4	1175	74.8	90.0	91.5	91	0.77	16.4	8.1	3.0	2.7	3.6	136	115

* Higher output (progressive motor)

HIGH EFFICIENCY THREE-PHASE MOTORS – IE2

EFFICIENCY LEVEL ACCORDING TO IEC 60034-30-1:2014
EFFICIENCY TESTING METHOD IEC 60034-2-1;2014

NOMINAL FULL LOAD EFFICIENCY ACCORDING TO IE2 CODE @ 400 V - 50 HZ; IE2 CODE @ 460 V - 60 HZ AND NEMA MG 1 - TABLE 12-11 (EPACT) @ 460 V - 60 HZ

Performance data referred @ 400 V - 50 Hz. For performance data @ 460 V - 60 Hz, please consult us.

FOR MAINS VOLTAGE
400 V - 50 HZ
460 V - 60 HZ

IE2

TEMPERATURE RISE TO CLASS B

Type		kW	HP	rpm	M_N Nm	IE2 η 50%	IE2 η 75%	IE2 η 100%	cos φ	I_N 400V	I_A/I_N	M_A/M_N	M_S/M_N	M_K/M_N	J 10^{-3} kgm²	kg
3000 rpm (2 poles)																
AMHE 56Z BA	**2**	0.12	0.16	2650	0.4	49.1	55.8	53.6	0.73	0.4	3.5	3.4	3.4	3.5	0.10	3.5
AMHE 56Z CA	**2**	0.18	0.24	2660	0.6	55.0	59.8	60.4	0.64	0.7	3.9	3.8	3.8	3.9	0.09	3.4
AMHE 63Z AA	**2**	0.18	0.25	2720	0.6	53.8	59.7	60.4	0.76	0.6	3.7	3.0	3.0	3.1	0.14	3.6
AMHE 63Z BA	**2**	0.25	0.33	2790	0.9	60.8	67.2	64.8	0.68	0.8	4.5	3.2	3.2	3.3	0.17	4.1
AMHE 63Z CA	**2***	0.37	0.5	2750	1.3	59.1	66.2	69.5	0.69	1.1	4.6	3.4	3.3	3.4	0.20	4.4
AMHE 71Z XA	**2**	0.37	0.5	2810	1.3	67.5	71.6	69.5	0.77	1.0	4.7	3.6	3.4	3.6	0.32	5.8
AMHE 71Z YA	**2**	0.55	0.75	2780	1.9	72.9	76.7	74.1	0.80	1.3	4.8	3.2	3.1	3.3	0.37	6.2
AMHE 71Z AA	**2***	0.75	1	2865	2.5	75.0	78.1	79.4	0.71	1.9	5.2	3.1	3.0	3.1	0.69	8.2
AMHE 80Z AA	**2**	0.75	1	2900	2.5	77.3	78.5	80.5	0.78	1.7	8.4	3.6	3.4	3.6	0.7	9.5
AMHE 80Z BA	**2**	1.1	1.5	2880	3.6	79.5	81.2	81.5	0.78	2.5	9.5	3.6	3.4	3.6	0.89	11.1
AMHE 80Z CA	**2***	1.5	2	2880	5.0	80.5	82.1	82.4	0.78	3.4	7.8	3.5	3.4	3.6	1.1	13.5
AMHE 90S AA	**2**	1.5	2	2880	5.0	81.0	82.8	82.8	0.80	3.2	10.1	3.6	3.1	4.0	1.56	14.0
AMHE 90L CA	**2**	2.2	3	2860	7.3	82.5	84.0	84.0	0.85	4.4	10.1	3.5	3.2	3.7	1.8	16.0
AMHE 90L DA	**2***	3	4	2880	9.9	85.0	86.0	85.6	0.82	6.1	9.9	3.5	3.3	3.8	2.0	18.0
AMHE 100L AA	**2**	3	4	2920	9.8	84.1	85.8	85.5	0.84	5.9	10.3	3.5	3.0	4.0	4.05	22.8
AMHE 100L BA	**2***	4	5.5	2920	13.1	85.2	86.4	86.1	0.86	7.8	10.4	3.3	3.0	3.8	4.1	22.8
AMHE 112M AA	**2**	4	5.5	2940	13.0	85.5	87.0	86.8	0.88	7.6	10.7	2.9	2.1	3.3	6.48	27.4
AMHE 112M BA	**2***	5.5	7.5	2920	18.0	85.8	87.4	87.3	0.88	10.4	9.9	3.0	2.1	3.2	8.58	34.0
AMHE 112M CA	**2***	7.5	10	2900	24.7	86.5	88.3	88.3	0.87	14.2	9.1	3.0	2.2	3.4	10.50	36.0
AMHE 132S YA	**2**	5.5	7.5	2900	18.1	86.0	88.0	87.9	0.89	10.2	8.6	2.7	2.3	3.2	14.0	46.0
AMHE 132S ZA	**2**	7.5	10	2900	24.7	86.3	88.6	88.4	0.89	13.8	8.9	2.8	2.5	3.3	16.0	53.0
AMHE 132M ZA	**2**	9.2	12.5	2920	30.1	88.4	89.9	90.0	0.87	16.9	9.4	3.2	3	3.8	17.5	58.0
AMHE 132M RA	**2***	11	15	2920	36.0	88.1	90.0	89.7	0.90	19.8	9.7	3.8	2.6	4.0	17.5	58.0
AMHE 132M TA	**2***	15	20	2920	49.1	88.9	90.6	90.3	0.89	27.0	9.7	3.8	2.2	4.0	21.0	64.0
AMHE 160M YA	**2**	11	15	2930	35.9	88.9	90.2	90.0	0.87	20.4	9.3	2.4	2.2	3.1	51.75	77.0
AMHE 160M ZA	**2**	15	20	2930	48.9	90.0	91.0	90.8	0.88	27.2	9.6	2.5	2.3	3.1	55.4	87.1
AMHE 160L ZA	**2**	18.5	25	2935	60.2	90.3	91.6	91.2	0.88	33.3	9.6	2.8	2.4	3.4	59.7	97.5
AMHE 160L TA	**2***	22	30	2935	71.6	91.0	91.7	91.5	0.89	38.6	9.9	3.0	2.6	3.7	64.0	108.7

* Higher output (progressive motor)

HIGH EFFICIENCY THREE-PHASE MOTORS – IE2

EFFICIENCY LEVEL ACCORDING TO IEC 60034-30-1:2014
EFFICIENCY TESTING METHOD IEC 60034-2-1;2014

NOMINAL FULL LOAD EFFICIENCY ACCORDING TO IE2 CODE @ 400 V - 50 HZ; IE2 CODE @ 460 V - 60 HZ AND NEMA MG 1 - TABLE 12-11 (EPACT) @ 460 V - 60 HZ

Performance data referred @ 400 V - 50 Hz. For performance data @ 460 V - 60 Hz, please consult us.

FOR MAINS VOLTAGE
400 V - 50 HZ
460 V - 60 HZ

IE2

TEMPERATURE RISE TO CLASS B

Type		kW	HP	rpm	M_N Nm	IE2 η 50%	IE2 η 75%	IE2 η 100%	cos φ	I_N 400V	I_A/I_N	M_A/M_N	M_S/M_N	M_K/M_N	J 10^{-3} kgm²	kg
1500 rpm (4 poles)																
AMHE 63Z AA	**4**	0.12	0.16	1330	0.8	61.3	62.6	59.1	0.67	0.4	2.4	2.0	1.9	2.0	0.25	3.3
AMHE 63Z BA	**4**	0.18	0.25	1345	1.3	61.9	66.7	64.7	0.66	0.6	2.3	1.9	1.8	1.9	0.27	4.1
AMHE 63Z CA	**4***	0.25	0.33	1356	1.8	67.3	71.3	68.5	0.65	0.9	2.7	2.2	2.0	2.1	0.30	4.2
AMHE 71Z AA	**4**	0.25	0.33	1390	1.8	67.0	71.2	68.5	0.77	0.7	3.2	1.9	1.8	2.0	0.65	5.7
AMHE 71Z BA	**4**	0.37	0.50	1410	2.6	68.4	73.3	72.7	0.70	1.0	3.3	2.2	2.1	2.2	0.76	6.0
AMHE 71Z CA	**4***	0.55	0.75[1]	1410	3.8	71.5	75.5	77.1	0.71	1.5	3.6	2.4	2.3	2.4	1.00	7.3
AMHE 80Z XA	**4**	0.55	0.75	1422	3.8	75.1	77.8	77.1	0.72	1.5	3.6	2.6	2.5	2.6	1.38	8.2
AMHE 80Z AA	**4**	0.75	1	1430	5.0	79.2	80.3	80.2	0.76	1.8	5.5	2.8	2.7	3.0	2.5	11.0
AMHE 90S AA	**4**	1.1	1.5	1430	7.3	81.4	82.7	82.5	0.77	2.5	6.1	4.0	3.9	4.1	3.73	18.0
AMHE 90L BA	**4**	1.5	2	1430	10.0	81.0	83.5	83.0	0.77	3.4	7.9	3.9	3.8	4.0	3.73	19.0
AMHE 100L AA	**4**	2.2	3	1450	14.5	84.0	85.3	85.1	0.74	5.1	6.0	3.2	3	3.4	5.58	22.4
AMHE 100L BA	**4**	3	4	1440	19.9	82.6	84.7	86.4	0.77	6.5	8.5	3.4	3.1	3.6	7.3	26.5
AMHE 112M AA	**4**	4	5.5	1450	26.3	86.0	87.3	87.1	0.78	8.5	6.1	3.1	2.8	3.3	13.3	30.4
AMHE 132S AA	**4**	5.5	7.5	1455	36.1	89.0	89.6	87.7	0.83	10.9	8.5	2.6	2.3	3.7	25.0	45.0
AMHE 132M BA	**4**	7.5	10	1460	49.1	90.0	90.5	88.7	0.83	14.6	8.2	2.6	2.4	3.7	30.0	55.0
AMHE 132M CA	**4**	9.2	12.5	1460	60.3	90.2	90.6	89.3	0.83	18.0	8.2	2.6	2.4	3.7	33.0	65.0
AMHE 132M DA	**4***	11	15	1455	72.2	90.2	90.7	89.8	0.81	21.8	8.2	2.6	2.4	3.7	36.0	67.0
AMHE 160M AA	**4**	11	15	1470	71.3	91.4	92.0	91.3	0.81	22.0	8.2	2.1	1.7	2.8	69.0	90.0
AMHE 160L BA	**4**	15	20	1460	97.8	92.0	92.3	91.7	0.82	29.0	8.2	2.1	1.7	2.8	89.0	100.0
AMHE 160L CA	**4**	18.5	25	1460	122.0	92.4	92.5	91.8	0.83	35.2	8.2	2.1	1.7	2.8	105.0	105.0
AMHE 160L DA	**4**	22	30	1460	143.9	92.4	92.5	91.9	0.80	43.5	8.3	2.2	1.6	3.0	120.7	110.0

* Higher output (progressive motor)

HIGH EFFICIENCY THREE-PHASE MOTORS – IE2

EFFICIENCY LEVEL ACCORDING TO IEC 60034-30-1:2014
EFFICIENCY TESTING METHOD IEC 60034-2-1;2014

FOR MAINS VOLTAGE
400 V - 50 HZ

IE2

TEMPERATURE RISE TO CLASS B

Type		kW	HP	rpm	M_N Nm	IE2 η 50%	IE2 η 75%	IE2 η 100%	cos φ	I_N 400V	I_A/I_N	M_A/M_N	M_S/M_N	M_K/M_N	J 10^{-3} kgm²	kg
1000 rpm (6 poles)																
AMEE 71Z AA	**6**	0.18	0.25	886	2.0	58.7	60.4	56.6	0.61	0.7	2.2	1.6	1.5	1.6	1.00	6.1
AMEE 71Z BA	**6**	0.25	0.33	860	2.7	62.0	62.7	61.6	0.65	0.9	2.5	1.7	1.6	1.7	1.19	6.6
AMEE 80Z AA	**6**	0.37	0.5	937	3.8	70.2	71.8	67.6	0.75	1.0	2.7	1.6	1.6	2.1	1.83	8.0
AMEE 80Z BA	**6**	0.55	0.75	922	5.7	66.9	71.2	73.1	0.74	1.5	2.9	2.2	2.1	2.1	2.36	9.4
AMEE 90S AA	**6**	0.75	1	925	7.7	75.3	75.8	76.2	0.65	2.2	4.6	1.7	1.6	1.8	4.78	15.0
AMEE 90L BA	**6***	1.1	1.5	935	11.2	78.5	78.7	78.9	0.67	3.0	4.2	1.8	1.8	2.3	6.45	20.3
AMEE 100L AA	**6**	1.1	1.5	950	11.1	75.7	77.6	79.5	0.67	3.0	5.5	1.9	1.9	2.4	7.48	19.4
AMEE 100L BA	**6**	1.5	2	950	15.1	78.5	79.4	79.8	0.69	3.9	5.5	2.1	1.5	2.2	11.6	27.1
AMEE 112M AA	**6**	2.2	3	960	21.9	79.4	81.0	81.8	0.73	5.3	6.1	3.1	2.2	3.1	18.7	39.0
AMEE 132S YA	**6**	3	4	960	29.8	82.3	82.9	83.5	0.58	8.9	5.6	2.2	1.4	3.2	37.7	55.8
AMEE 132M YA	**6**	4	5.5	955	40.0	84.1	84.8	85.2	0.66	10.3	5.8	2.1	1.2	2.9	44.4	65.5
AMEE 132M TA	**6***	5.5	7.5	970	54.1	85.0	86.2	86.5	0.75	12.2	7.0	1.9	1.1	2.7	54.1	64.1
AMEE 160M YA	**6**	5.5	7.5	975	53.9	84.7	85.6	86.1	0.78	11.7	7.4	2.3	2.3	3.0	75.2	70.5
AMEE 160M ZA	**6**	7.5	10	970	73.8	85.8	87.3	87.5	0.78	15.8	7.7	3.0	2.8	3.8	103	96.6
AMEE 160L ZA	**6**	9.2	12.4	965	91.0	86.3	87.4	88.2	0.83	18.1	8.3	3.1	2.7	3.5	125	103
AMEE 160L TA	**6**	11	15	965	108.9	87.9	88.2	88.7	0.79	22.5	8.0	2.7	2.4	3.2	156	129

* Higher output (progressive motor)

EFFICIENCY LEVEL ACCORDING TO IEC 60034-30-1:2014
EFFICIENCY TESTING METHOD IEC 60034-2-1;2014

FOR MAINS VOLTAGE 400 V - 50 HZ

IE1

TEMPERATURE RISE TO CLASS B

Type		kW	HP	rpm	M_N Nm	IE1 η 50%	IE1 η 75%	IE1 η 100%	cos φ	I_N 400V	I_N 380-420V	I_A/I_N	M_A/M_N	M_S/M_N	M_K/M_N	J 10^{-3} kgm²	kg
3000 rpm (2 poles)																	
AM 56Z AA	**2**	0.09	0.12	2810	0.3	49.0	53.0	59.0	0.67	0.35	0.40	3.9	3.8	3.8	3.9	0.09	3.4
AM 56Z BA	**2**	0.12	0.16	2800	0.4	51.0	56.0	62.0	0.68	0.40	0.45	3.5	3.4	3.4	3.5	0.10	3.5
AM 63Z AA	**2**	0.18	0.25	2790	0.6	54	58	63.0	0.73	0.60	0.65	3.7	3.0	3.0	3.1	0.14	3.6
AM 63Z BA	**2**	0.25	0.33	2790	0.9	57	62	66.0	0.70	0.80	0.75	4.5	3.2	3.2	3.3	0.17	4.1
AM 63Z CA	**2***	0.37 [1]	0.50 [1]	2800	1.3	54	58	65.0	0.70	1.20	1.25	4.6	3.4	3.3	3.4	0.20	4.4
AM 71Z AA	**2**	0.37	0.50	2820	1.3	58.0	64.0	70.0	0.78	1.0	1.2	4.7	3.6	3.4	3.6	0.32	5.8
AM 71Z BA	**2**	0.55	0.75	2830	1.9	57.0	64.0	71.0	0.77	1.5	1.6	4.8	3.2	3.1	3.3	0.37	6.2
AM 71Z CA	**2***	0.75 [1]	1 [1]	2800	2.6	58.9	65.7	72.6	0.76	2.0	2.1	5.2	3.1	3.2	3.1	0.48	7.2
AM 80Z AA	**2**	0.75	1	2840	2.5	66.3	71.5	73.0	0.78	1.9	2.0	5.0	2.8	2.8	2.9	0.6	8.4
AM 80Z BA	**2**	1.1	1.5	2810	3.7	72.1	75.0	75.3	0.82	2.5	2.6	4.6	2.4	2.8	2.9	0.75	9.5
AM 80Z CA	**2***	1.5 [1]	2 [1]	2825	5.1	74.7	77.5	77.8	0.83	3.3	3.4	5.0	2.9	3.0	3.3	1.92	11.1
AM 90S AA	**2**	1.5	2	2830	5.1	75.6	78.7	78.6	0.82	3.4	3.5	5.0	3.1	2.9	3.0	1.23	12.7
AM 90S BA	**2***	1.8	2.5	2805	6.1	74.9	78.0	78.2	0.80	4.2	4.3	4.5	2.6	2.4	2.5	1.23	12.7
AM 90L CA	**2**	2.2	3	2860	7.3	81.5	82.8	81.8	0.81	4.9	4.9	7.1	4.1	3.6	4.0	1.68	16.0
AM 90L DA	**2***	3 [1]	4 [1]	2860	10.0	78.7	81.8	82.2	0.80	6.6	6.8	7.2	3.9	3.4	3.8	2.16	18.7
AM 100L AA	**2**	3	4	2860	10.0	78.9	81.4	81.5	0.85	6.4	6.7	6.0	3.1	3.1	3.3	2.36	19.3
AM 100L BA	**2***	4 [1]	5.5 [1]	2835	13.5	81.1	82.5	81.7	0.88	8.0	8.1	6.2	2.9	2.5	2.9	2.90	19.7
AM 100L CA	**2***	5.5 [1]	7.5 [1]	2865	18.3	83.7	84.6	83.3	0.86	11.1	11.3	7.2	3.5	3.4	4.1	3.90	25.9
AM 112M AA	**2**	4	5.5	2880	13.3	81.9	84.0	83.5	0.82	8.4	8.7	8.0	3.4	3.5	3.6	4.65	24.3
AM 112M BA	**2***	5.5	7.5	2900	18.1	83.6	84.7	85.0	0.86	10.9	11.2	7.8	3.5	3.4	3.6	5.80	27.4
AM 112M CA	**2***	7.5	10	2900	24.7	86.7	87.8	87.1	0.87	14.3	14.8	8.7	4.0	3.9	4.0	8.50	33.6
AM 132S YA	**2**	5.5	7.5	2890	18.2	83.2	84.7	85.0	0.83	11.3	11.4	6.0	2.2	2.1	2.3	9.50	37.0
AM 132S ZA	**2**	7.5	10	2880	24.9	85.6	86.7	86.1	0.87	14.5	14.9	6.4	2.9	2.7	3.1	12.30	42.6
AM 132M ZA	**2***	9.2	12.5	2900	30.3	84.7	86.8	87.0	0.84	18.4	18.8	7.0	2.8	2.4	3.2	13.20	48.0
AM 132M RA	**2***	11	15	2880	36.5	87.1	88.1	88.0	0.85	21.3	21.7	6.9	3.2	2.8	3.8	16.00	52.5
AM 132M TA	**2***	15 [1]	20 [1]	2920	49.1	86.4	88.6	88.9	0.83	29.5	30.5	7.0	3.2	2.8	3.7	21.20	59.0
AM 160M VA	**2**	11	15	2940	35.7	83.4	86.4	87.7	0.83	21.9	22.7	7.4	2.5	2.3	3.1	33.10	77.0
AM 160M XA	**2**	15	20	2940	48.7	87.3	88.9	88.9	0.85	28.6	29.2	8.1	3.1	2.6	3.7	43.90	94.0
AM 160L XA	**2**	18.5	25	2950	59.9	88.2	89.7	89.6	0.87	34.3	34.8	8.5	3.6	3.0	4.2	57.00	107.8
AM 160L RA	**2***	22	30	2940	71.5	88.7	90.5	90.4	0.90	39.1	39.4	8.4	3.0	2.6	3.7	57.00	108.7

1) Temperature rise to class F
* Higher output (progressive motor)

STANDARD EFFICIENCY THREE-PHASE MOTORS – IE1

EFFICIENCY LEVEL ACCORDING TO IEC 60034-30-1:2014
EFFICIENCY TESTING METHOD IEC 60034-2-1;2014

FOR MAINS VOLTAGE
400 V - 50 HZ

IE1

TEMPERATURE RISE TO CLASS B

Type		kW	HP	rpm	M_N Nm	IE1 η 50%	IE1 η 75%	IE1 η 100%	cos φ	I_N 400V	I_N 380-420V	I_A/I_N	M_A/M_N	M_S/M_N	M_K/M_N	J 10^{-3} kgm²	kg
1500 rpm (4 poles)																	
AM 56Z AA	**4**	0.06	0.08	1300	0.4	42.0	44.0	48.0	0.70	0.28	0.32	2.6	2.1	2.0	2.1	0.14	2.7
AM 56Z BA	**4**	0.09	0.12	1330	0.6	43.0	47.0	51.0	0.74	0.35	0.40	2.5	2.2	2.1	2.2	0.16	2.9
AM 63Z AA	**4**	0.12	0.16	1350	0.8	46.0	50.0	57.0	0.65	0.50	0.55	2.4	2.0	1.9	2.0	0.25	3.3
AM 63Z BA	**4**	0.18	0.25	1330	1.3	47.0	50.0	58.0	0.70	0.65	0.70	2.3	1.9	1.8	1.9	0.27	4.1
AM 63Z CA	**4***	0.25	0.33	1360	1.8	49.0	52.5	58.0	0.74	0.85	0.90	2.7	2.2	2.0	2.1	0.30	4.2
AM 71Z AA	**4**	0.25	0.33	1340	1.8	55.0	59.0	64.0	0.66	0.90	1.00	3.2	1.9	1.8	2.0	0.65	5.7
AM 71Z BA	**4**	0.37	0.50	1370	2.6	60.0	63.0	67.0	0.67	1.20	1.25	3.3	2.2	2.1	2.2	0.76	6.0
AM 71Z CA	**4***	0.55 [1]	0.75 [1]	1380	3.8	61.0	64.0	69.0	0.68	1.70	1.80	3.6	2.4	2.3	2.4	1.00	7.3
AM 80Z AA	**4**	0.55	0.75	1400	3.8	67.0	69.0	70.0	0.72	1.6	1.7	3.6	2.6	2.5	2.6	1.38	8.2
AM 80Z BA	**4**	0.75	1	1410	5.1	68.7	70.8	72.4	0.72	2.1	2.2	4.4	2.8	2.3	2.8	1.78	9.3
AM 80Z CA	**4***	1.1 [1]	1.5 [1]	1385	7.6	73.4	75.7	75.2	0.77	2.8	2.9	4.4	2.5	2.5	2.6	2.18	10.6
AM 90S AA	**4**	1.1	1.5	1400	7.5	75.8	76.0	75.4	0.78	2.7	2.9	5.2	2.5	2.4	2.8	2.20	12.5
AM 90L BA	**4**	1.5	2	1400	10.2	77.6	77.8	77.5	0.78	3.6	3.7	5.7	2.8	2.6	3.0	2.80	14.5
AM 90L CA	**4**	1.8 [1]	2.5 [1]	1380	12.5	76.3	76.5	75.9	0.81	4.2	4.3	5.5	2.7	2.5	2.9	3.35	14.5
AM 90L DA	**4***	2.2 [1]	3 [1]	1400	15.0	78.3	78.5	77.9	0.77	5.3	5.5	4.8	2.9	2.8	3.2	3.65	17.0
AM 100L AA	**4**	2.2	3	1435	14.6	76.5	79.1	79.9	0.74	5.4	5.6	5.3	2.5	2.4	2.7	4.50	19.5
AM 100L BA	**4**	3	4	1425	20.1	82.0	83.0	81.6	0.78	6.8	6.9	4.6	2.4	2.3	2.5	5.75	22.5
AM 100L CA	**4***	4 [1]	5.5 [1]	1400	27.3	80.8	81.8	80.4	0.78	9.2	9.3	6.0	2.6	2.4	2.9	6.30	25.0
AM 112M AA	**4**	4	5.5	1430	26.7	83.2	83.9	83.1	0.82	8.5	8.8	6.3	2.2	2.0	2.8	10.70	29.5
AM 112M BA	**4***	5.5 [1]	7.5 [1]	1430	36.7	84.1	84.8	84.0	0.83	11.4	11.7	6.5	2.2	2.0	2.9	13.50	34.0
AM 132S AA	**4**	5.5	7.5	1460	36.1	85.1	86.8	84.7	0.84	11.0	11.5	7.0	2.6	2.3	3.0	21.20	41.9
AM 132M BA	**4**	7.5	10	1460	49.7	85.8	87.6	86.0	0.84	14.9	15.5	8.2	2.6	2.4	3.7	27.80	51.0
AM 132M CA	**4**	9.2	12.5	1455	60.3	86.5	87.5	86.9	0.83	18.3	18.9	8.2	2.6	2.4	3.7	31.50	65.0
AM 132M DA	**4***	11 [1]	15 [1]	1450	72.4	84.7	86.5	87.6	0.79	23.0	23.5	8.2	2.6	2.4	3.7	31.50	65.0
AM 160M AA	**4**	11	15	1470	71.9	87.0	88.9	87.6	0.82	22.0	22.7	8.2	2.1	1.7	2.8	69.00	90.0
AM 160L BA	**4**	15	20	1465	98.1	88.1	89.6	88.7	0.84	29.0	29.6	8.1	2.1	1.7	2.8	89.00	100.0
AM 160L CA	**4***	18.5	25	1460	121.8	88.9	90.1	89.3	0.84	35.5	36.0	8.2	2.1	1.7	2.8	105.00	105.0
AM 160L DA	**4***	22	30	1460	143.9	89.0	90.1	89.9	0.86	41.0	42.0	8.2	2.1	1.7	2.8	120.70	110.0

1) Temperature rise to class F
* Higher output (progressive motor)

STANDARD EFFICIENCY THREE-PHASE MOTORS – IE1

EFFICIENCY LEVEL ACCORDING TO IEC 60034-30-1:2014
EFFICIENCY TESTING METHOD IEC 60034-2-1;2014

FOR MAINS VOLTAGE
400 V - 50 HZ

IE1

TEMPERATURE RISE TO CLASS B

Type		kW	HP	rpm	M_N Nm	IE1 η 50%	IE1 η 75%	IE1 η 100%	cos φ	I_N 400V	I_N 380-420V	I_A/I_N	M_A/M_N	M_S/M_N	M_K/M_N	J 10^{-3} kgm²	kg
1000 rpm (6 poles)																	
AM 71Z AA	**6**	0.18	0.25	880	2.0	46.0	48.0	53.0	0.60	0.85	0.9	2.2	1.6	1.5	1.6	1.00	6.1
AM 71Z BA	**6**	0.25 1)	0.33 1)	880	2.7	46.0	50.0	54.0	0.62	1.10	1.2	2.5	1.7	1.6	1.7	1.19	6.6
AM 80Z AA	**6**	0.37	0.5	920	3.8	47.0	58.0	60.0	0.70	1.25	1.3	2.7	1.6	1.6	2.1	1.83	8.0
AM 80Z BA	**6**	0.55	0.75	920	5.7	60.0	64.0	68.0	0.67	1.75	1.8	2.9	2.2	2.1	2.1	2.36	9.4
AM 90S AA	**6**	0.75	1	910	7.9	70.5	72.5	71.5	0.63	2.4	2.5	2.9	1.7	1.5	1.7	2.90	11.6
AM 90L BA	**6**	1.1	1.5	920	11.4	72.0	73.5	73.0	0.66	3.3	3.4	3.0	1.7	1.5	1.7	4.38	15.0
AM 100L AA	**6**	1.5	2	930	15.4	73.3	75.8	75.3	0.69	4.2	4.4	3.7	1.8	1.8	2.3	6.35	17.5
AM 100L BA	**6**	1.8	2.5	940	18.3	74.6	77.1	76.6	0.67	5.1	5.3	4.2	2.4	2.4	2.8	9.00	22.0
AM 112M AA	**6**	2.2	3	940	22.4	77.0	79.0	78.0	0.74	5.3	5.4	4.4	2.4	2.4	2.6	12.85	26.0
AM 112M CA	**6***	3	4	940	30.5	81.8	82.8	82.8	0.74	7.0	7.2	5.3	2.9	2.9	2.9	17.90	39.0
AM 132S ZA	**6**	3	4	950	30.2	79.5	81.5	81.3	0.72	7.4	7.5	4.9	2.0	1.8	2.4	21.40	36.7
AM 132M YA	**6**	4	5.5	950	40.2	81.4	83.1	82.7	0.71	9.9	10.5	4.5	2.2	2.0	2.5	28.90	42.5
AM 132M ZA	**6**	5.5	7.5	950	55.3	82.2	83.6	83.6	0.71	13.5	13.5	4.1	2.2	1.9	2.2	37.40	55.5
AM 132M TA	**6***	7.5 1)	10 1)	960	74.6	82.8	83.5	82.9	0.75	17.4	17.6	5.0	2.3	1.9	2.8	46.70	64.1
AM 160M ZA	**6**	7.5	10	970	73.8	84.4	86.5	86.3	0.78	16.0	16.3	6.2	2.8	2.7	3.2	103	96.6
AM 160L ZA	**6**	11	15	960	109.4	88.1	88.5	87.8	0.78	23.4	24.0	6.0	2.5	2.2	3.5	136	113.6

1) Temperature rise to class F
* Higher output (progressive motor)

EFFICIENCY TESTING METHOD IEC 60034-2-1;1996

Type		kW	HP	rpm	M_N Nm	η 50%	η 75%	η 100%	cos φ	I_N 400V	I_N 380-420V	I_A/I_N	M_A/M_N	M_S/M_N	M_K/M_N	J 10^{-3} kgm²	kg
750 rpm (8 poles)																	
AM 71Z AA	**8**	0.12	0.16	670	1.7	40	44	50	0.55	0.65	0.7	2.4	2.5	2.4	2.5	0.76	6.0
AM 80Z AA	**8**	0.25	0.33	680	3.5	40	47	51	0.62	1.1	1.2	2.2	1.8	1.9	2.0	1.83	8.0
AM 90S AA	**8**	0.37	0.5	680	5.2	52	58	59	0.53	1.7	1.8	2.1	1.4	1.3	1.6	2.91	11.4
AM 90L BA	**8**	0.55	0.75	680	7.7	52	58	59	0.54	2.5	2.7	2.1	1.4	1.3	1.6	4.40	15.0
AM 100L AA	**8**	0.75	1	690	10.4	59	64	65	0.65	2.6	2.8	3.0	1.6	1.5	1.7	6.35	17.6
AM 100L BA	**8**	1.1	1.5	690	15.2	59	67	68	0.62	3.9	4.0	3.0	1.9	1.3	1.6	9.00	22.6
AM 112M AA	**8**	1.5	2	696	20.6	66	69	70	0.66	4.6	4.8	4.0	1.8	2.0	2.4	15.35	35.0
AM 132S ZA	**8**	2.2	3	710	29.6	79.3	80.5	78.8	0.64	6.4	6.6	3.4	1.7	1.6	1.7	28.90	45.5
AM 132M ZA	**8**	3	4	710	40.4	81.3	82.0	79.8	0.67	8.1	9.2	3.6	1.7	1.6	1.9	37.40	54.5
AM 160M YA	**8**	4	5.5	700	54.6	84.9	84.5	84.4	0.72	9.5	9.7	4.5	1.8	1.6	2.2	76.70	75.0
AM 160M ZA	**8**	5.5	7.5	720	72.9	85.6	85.2	85.0	0.73	12.8	13.3	4.0	1.8	1.6	2.3	103.70	92.0
AM 160L ZA	**8**	7.5	10	710	100.9	86.3	85.8	85.5	0.74	17.1	17.8	4.0	1.8	1.6	2.3	136.00	113

DESIGNED FOR RANGE
OF RATED VOLTAGE
380-420 V ± 5% - 50 HZ

FOR MAINS VOLTAGE
400 V - 50 HZ

TEMPERATURE RISE TO CLASS B

Type		kW	HP	rpm	M_N Nm	η 100%	cos φ	I_N 400V	I_N 380-420V	I_A/I_N	M_A/M_N	J 10^{-3} kgm²	kg
1500/3000 rpm (4/2 poles) - Dahlander connection Δ/YY													
AM 63Z AA	**4/2**	0.20/0.30	0.27/0.40	1345/2700	1.4/1.1	56/65	0.65/0.81	0.8/0.83	0.89/0.88	2.4/3.2	2.1/2.1	0.40	4.6
AM 71Z AA	**4/2**	0.30/0.45	0.40/0.65	1374/2830	2.1/1.5	61/66	0.78/0.73	1.0/1.35	1.2/1.5	3.3/3.0	2.3/2.1	0.76	6.3
AM 80Z AA	**4/2**	0.45/0.60	0.65/0.80	1390/2760	3.1/2.1	64/68.8	0.75/0.80	1.4/1.6	1.5/1.7	3.8/4.0	2.3/2.2	1.58	8.3
AM 80Z BA	**4/2**	0.55/0.75	0.75/1.0	1435/2850	3.7/2.5	70/71.2	0.67/0.77	1.7/2.0	1.8/2.1	4.5/5.0	2.6/2.8	2.00	11.5
AM 80Z CA	**4/2**	0.8/1.1	1.1/1.5	1425/2830	5.4/3.7	76.1/77.2	0.70/0.79	2.2/2.6	2.5/2.8	4.5/4.9	2.5/2.7	2.41	14.7
AM 90L AA	**4/2**	1.2/1.55	1.6/2.1	1435/2850	8/5.2	77.4/78.3	0.71/0.79	3.2/3.7	3.4/3.9	4.7/5.1	2.6/2.7	3.10	15.6
AM 90L BA	**4/2**	1.6/2.0 [1]	2.15/2.7 [1]	1390/2810	11/6.8	73.5/75.5	0.78/0.86	4.0/4.6	4.1/4.7	4.1/5.5	2.7/2.6	3.73	17.1
AM 100L AA	**4/2**	1.8/2.5	2.5/3.35	1420/2865	12.1/8.3	78.5/77.4	0.76/0.84	4.5/5.6	4.7/5.8	5.2/5.5	2.2/2.2	4.60	21.4
AM 100L BA	**4/2**	2.2/3.0	3.0/4.0	1410/2830	14.9/10.1	74.6/71.4	0.72/0.82	5.9/7.4	6.1/7.7	4.2/4.3	1.8/2.0	4.60	22.5
AM 100L CA	**4/2**	2.6/3.3	3.5/4.4	1430/2890	17.4/10.9	82.6/78.6	0.78/0.76	5.9/8.0	6.1/8.5	4.7/5.5	1.9/2.2	5.58	23.2
AM 112M AA	**4/2**	3.3/4.4	4.4/5.9	1410/2800	22.4/15	77.4/75.4	0.82/0.85	7.5/9.9	7.8/10.6	4.5/5.1	2.1/2.4	13.30	36.1
AM 132S ZA	**4/2**	4.4/5.5	6.0/7.5	1450/2925	29/18	83.0/84.6	0.70/0.87	11.0/10.8	12.0/11.8	4.4/7.2	2.2/2.7	13.83	42.6
AM 132M ZA	**4/2**	6.6/8.1	9.0/11.0	1460/2920	43.2/26.5	85.4/84.5	0.76/0.90	14.7/15.4	15.5/16.4	5.5/7.5	2.6/2.9	17.13	51.4
AM 160M ZA	**4/2**	8.8/11.0	12.0/15.0	1460/2940	57.6/35.7	87.1/87.5	0.79/0.91	18.5/20.0	19.0/21.0	5.5/7.5	2.0/1.9	51.75	94.0
AM 160L ZA	**4/2**	12.5/15.0	17.0/20.4	1470/2955	81.2/48.5	89.4/90.0	0.74/0.90	27.4/26.8	29.0/28.2	4.8/7.4	2.1/2.3	64.00	108.7

Type		kW	HP	rpm	M_N Nm	η 100%	cos φ	I_N 400V	I_N 380-420V	I_A/I_N	M_A/M_N	J 10^{-3} kgm²	kg
750/1500 rpm (8/4 poles) - Dahlander connection Δ/YY													
AM 71Z AA	**8/4**	0.09/0.15	0.12/0.20	610/1310	1.4/1.1	40/56	0.61/0.75	0.53/0.52	0.59/0.57	2.5/3.2	1.6/1.6	0.71	6.3
AM 80Z AA	**8/4**	0.18/0.37	0.25/0.50	700/1370	2.5/2.6	43.2/58.7	0.63/0.83	1.0/1.1	1.1/1.2	2.6/3.4	1.8/1.6	1.97	7.9
AM 80Z BA	**8/4**	0.26/0.51	0.35/0.68	700/1360	3.5/3.6	44.1/61.2	0.60/0.88	1.2/1.4	1.3/1.5	2.5/3.6	2.0/1.6	2.47	9.2
AM 90S AA	**8/4**	0.37/0.75	0.50/1.0	690/1385	5.1/5.2	52.2/67.1	0.58/0.82	1.8/2.0	1.9/2.1	2.8/3.9	1.9/1.8	3.18	13.5
AM 90L BA	**8/4**	0.5/1.0	0.67/1.34	690/1410	6.9/6.8	52.2/72.5	0.58/0.80	2.4/2.4	2.5/2.5	3.3/4.0	2.3/1.9	4.78	15.7
AM 100L AA	**8/4**	0.7/1.4	0.94/1.9	700/1440	9.5/9.3	57.2/78.5	0.50/0.78	3.5/3.3	3.7/3.4	2.8/4.3	2.1/1.9	5.58	21.9
AM 100L BA	**8/4**	0.9/1.8 [1]	1.2/2.5 [1]	690/1415	12.5/12.1	62/76	0.56/0.87	3.8/4.0	4.0/4.3	2.5/4.5	1.9/1.8	6.00	23.7
AM 112M AA	**8/4**	1/1.8	1.34/2.5	710/1445	13.5/11.9	66.1/78.5	0.61/0.82	4.1/4.1	4.4/4.2	3.9/6.3	2.2/2.1	14.18	31.7
AM 112M BA	**8/4**	1.3/2.6 [1]	1.75/3.0 [1]	705/1420	17.6/17.5	70.0/76.3	0.65/0.88	4.6/5.7	4.8/5.9	3.2/4.8	2.1/2.0	16.70	34.2
AM 132S ZA	**8/4**	2.1/3.7	2.9/5.0	710/1440	28.2/24.5	70.2/76.1	0.66/0.84	6.5/8.4	6.7/8.6	4.0/5.2	1.9/1.7	29.50	42.5
AM 132M ZA	**8/4**	2.6/4.8	3.5/6.5	715/1450	34.7/31.6	71.6/78.8	0.60/0.80	8.8/11.0	9.8/12.0	4.3/5.5	2.3/1.8	37.75	55.5
AM 160M YA	**8/4**	4.0/6.3	5.5/8.6	710/1410	53.8/42.7	80.0/81.0	0.64/0.88	11.3/12.8	12.3/13.5	4.6/6.5	1.8/ 1.7	81.25	88.5
AM 160L YA	**8/4**	4.8/7.5	6.5/10.0	730/1470	62.8/48.7	80.0/85.0	0.65/0.85	13.2/15.0	14.0/16.0	4.5/6.5	1.8/1.6	105.75	106.5
AM 160L ZA	**8/4**	5.9/10.3	8.0/14.0	725/1450	77.7/67.8	81.0/87.0	0.66/0.88	16.1/19.5	17.0/20.4	5.0/6.0	1.9/1.6	127.50	110.5

1) Temperature rise to class F

DESIGNED FOR RANGE
OF RATED VOLTAGE
380-420 V ± 5% - 50 HZ

FOR MAINS VOLTAGE
400 V - 50 HZ

TEMPERATURE RISE TO CLASS B

Type		kW	HP	rpm	M_N Nm	η 100%	cos φ	I_N 400V	I_N 380-420V	I_A/I_N	M_A/M_N	J 10^{-3} kgm²	kg
1500/1000 rpm (4/6 poles) - separate windings													
AM 71Z AA	**4/6**	0.22/0.15	0.30/0.20	1430/900	1.5/1.6	61/44	0.7/0.64	0.78/0.68	0.83/0.73	1.9/3.4	1.5/1.8	0.73	6.2
AM 80Z AA	**4/6**	0.37/0.26	0.50/0.35	1385/905	2.6/2.7	61.4/48.1	0.82/0.80	1.1/1.0	1.1/1.1	3.7/2.6	1.7/1.3	1.97	8.3
AM 80Z BA	**4/6**	0.55/0.37	0.75/0.50	1380/900	3.8/3.9	60.5/51.1	0.64/0.82	1.5/1.3	1.6/1.4	3.7/2.7	1.6/1.2	2.47	10.0
AM 90S AA	**4/6**	0.75/0.5	1.0/0.67	1400/930	5.1/5.1	63/64	0.81/0.61	2.2/1.9	2.3/2.1	3.0/3.5	1.4/1.8	4.10	13.4
AM 90L BA	**4/6**	1/0.65	1.34/0.87	1380/920	6.9/6.7	68.8/67.1	0.81/0.62	2.6/2.3	2.8/2.5	2.9/3.4	1.1/1.6	4.78	16.4
AM 100L AA	**4/6**	1.2/0.8	1.6/1.07	1460/940	7.8/8.1	76.0/67.9	0.66/0.70	3.5/2.5	3.8/2.6	4.7/3.0	2.1/1.5	4.60	24.4
AM 100L BA	**4/6**	1.6/1.0	2.15/1.34	1445/935	10.6/10.2	77.6/69.5	0.73/0.63	4.1/3.3	4.3/3.5	5.8/3.0	2.8/1.7	5.58	33.2
AM 112M AA	**4/6**	1.8/1.3	2.5/1.75	1445/950	11.9/13.1	74.6/69.5	0.85/0.78	4.2/3.6	4.4/3.7	5.9/3.8	1.9/1.3	14.18	33.3
AM 112M BA	**4/6**	2.6/1.85	3.5/2.5	1445/950	17.2/18.6	73.8/71.6	0.86/0.73	6.0/5.2	6.2/5.4	6.1/4.4	2.0/1.7	17.53	37.0
AM 132S ZA	**4/6**	3.1/2.2	4.2/3.0	1440/965	20.6/21.8	80/78	0.80/0.74	7/5.5	7.5/6	5.8/5.6	2.1/2.0	22.4	41.9
AM 132M ZA	**4/6**	4.0/2.6	5.5/3.5	1470/975	26/25.5	81.0/79.3	0.83/0.74	8.6/6.4	9.3/7.0	7.7/5.2	2.0/1.9	29.25	51.0
AM 160M YA	**4/6**	5.5/3.7	7.5/5.0	1480/970	35.5/36.4	84.0/81.4	0.79/0.73	12.0/9.0	12.9/9.6	7.5/4.5	2.5/1.6	81.25	88.5
AM 160M ZA	**4/6**	7.5/4.8	10.2/6.5	1465/960	48.9/47.7	85.0/82.6	0.83/0.75	15..4/11.2	15.8/11.5	7.4/4.6	2.4/1.6	81.25	88.5
AM 160L ZA	**4/6**	11.0/6.6	15.0/9.0	1470/960	71.5/65.7	86.0/83.8	0.86/0.75	21.6/15.2	22.5/16.0	7.2/5.0	2.3/1.8	105.75	106.5

Type		kW	HP	rpm	M_N Nm	η 100%	cos φ	I_N 400V	I_N 380-420V	I_A/I_N	M_A/M_N	J 10^{-3} kgm²	kg
1000/750 rpm (6/8 poles) - separate windings													
AM 80Z AA	**6/8**	0.37/0.18	0.50/0.25	915/700	3.9/2.5	51.1/44.2	0.81/0.65	1.3/1.0	1.4/1.0	2.8/2.5	1.4/1.7	2.47	9.5
AM 90L AA	**6/8**	0.55/0.30	0.75/0.40	950/710	5.5/4	65.2/45.1	0.62/0.52	2.0/1.8	2.1/1.9	3.9/2.6	2.5/1.9	4.78	16.2
AM 100L AA	**6/8**	0.75/0.45	1.0/0.60	960/720	7.5/6	72.6/61.8	0.67/0.54	2.2/2.0	2.3/2.1	4.1/2.9	1.9/1.9	6.73	23.4
AM 112M AA	**6/8**	0.95/0.65	1.3/0.90	965/715	9.4/8.7	65.2/62.1	0.78/0.70	3.0/2.2	3.2/2.3	4.5/3.8	1.4/1.7	14.18	32.0
AM 112M BA	**6/8**	1.5/0.75	2.0/1.0	970/720	14.8/9.9	75.3/64.6	0.66/0.60	4.4/2.8	4.6/3.0	4.6/3.8	2.2/2.1	18.70	36.2
AM 132S ZA	**6/8**	2.2/1.2	3.0/1.6	970/730	21.7/15.7	73.5/66.0	0.69/0.60	6.3/4.4	6.6/4.8	4.5/3.7	1.6/1.7	29.5	42.5
AM 132M ZA	**6/8**	3.0/1.7	4.1/2.3	980/730	29.2/22.2	78.2/72.5	0.72/0.64	7.7/5.3	8.2/5.9	5.4/4.3	1.7/1.7	37.75	55.5
AM 160M YA	**6/8**	4.8/2.6	6.5/3.5	970/730	47.3/34	83.0/74.0	0.80/0.70	10.5/7.3	11.0/7.7	4.8/3.6	1.9/1.8	112.7	88.0
AM 160L ZA	**6/8**	5.9/3.3	8.0/4.5	970/730	58.1/43.2	83.2/73.0	0.76/0.60	13.5/10.9	14.5/11.4	6.5/5.0	2.2/2.1	150.25	97.5

DESIGNED FOR RANGE
OF RATED VOLTAGE
380-420 V ± 5% - 50 HZ

FOR MAINS VOLTAGE
400 V - 50 HZ

TEMPERATURE RISE TO CLASS B

Type		kW	HP	rpm	M_N Nm	η 100%	cos φ	I_N 400V	I_N 380-420V	I_A/I_N	M_A/M_N	J 10^{-3} kgm²	kg
1500/3000 rpm (4/2 poles) - Dahlander connection Y/YY													
AMV 63Z AA	**4/2**	0.07/0.33	0.095/0.45	1350/2700	0.5/1.2	55/60	0.70/0.80	0.25/0.95	0.27/1.1	2.5/2.6	1.8/1.6	0.37	5.0
AMV 71Z AA	**4/2**	0.08/0.37	0.11/0.5	1350/2870	0.6/1.2	60/64	0.65/0.68	0.30/1.3	0.35/1.4	3.2/4.3	2.0/2.8	0.82	7.9
AMV 71Z BA	**4/2**	0.12/0.55	0.16/0.75	1430/2835	0.8/1.9	70/68	0.65/0.72	0.40/1.6	0.42/1.7	4.1/4.0	3/2.8	1.08	10.0
AMV 80Z AA	**4/2**	0.15/0.75	0.2/1.0	1400/2710	1/2.6	70/68	0.68/0.80	0.45/1.9	0.45/2.0	2.6/4.6	2.8/2.9	1.58	8.3
AMV 80Z BA	**4/2**	0.22/1.1	0.3/1.5	1420/2820	1.5/3.7	70/73	0.75/0.84	0.6/2.5	0.65/2.6	4.6/4.7	2.7/2.9	2.0	11.5
AMV 90L AA	**4/2**	0.30/1.5	0.4/2.0	1400/2830	2/5.1	69/70	0.70/0.84	0.9/3.5	1.0/3.7	4.7/5.0	2.7/3.0	3.13	15.6
AMV 90L BA	**4/2**	0.44/2.2	0.6/3.0	1430/2830	2.9/7.4	74/72	0.76/0.89	1.1/4.8	1.2/5.0	4.5/5.2	2.6/2.8	3.73	17.1
AMV 100L AA	**4/2**	0.50/2.5	0.67/3.3	1430/2840	3.3/8.4	72/73	0.77/0.88	1.3/5.3	1.4/5.6	4.6/5.0	2.2/2.3	4.6	21.4
AMV 100L BA	**4/2**	0.60/3.0	0.8/4.0	1440/2850	4/10.1	78/77	0.79/0.87	1.3/6.2	1.4/6.5	4.5/4.5	2.2/2.1	5.58	23.2
AMV 112M AA	**4/2**	0.75/3.70	1.0/5.0	1440/2850	5/12.4	74/72	0.80/0.90	1.7/7.9	1.9/2.2	4.5/5.1	2.0/2.4	13.3	36.1
AMV 112M BA	**4/2**	0.9/4.5	1.2/6.1	1440/2850	6/15.1	75/73	0.82/0.90	2.0/9.5	2.1/9.8	4.5/5.5	2.0/2.3	14.75	40.0
AMV 132S AA	**4/2**	1.1/5.5	1.5/7.5	1440/2880	7.3/18.2	81.5/84.8	0.78/0.90	2.5/10.4	2.6/11.0	5.0/6.0	2.1/2.8	13.83	42.6
AMV 132S BA	**4/2**	1.5/7 [1]	2/9.5 [1]	1440/2900	9.9/23.1	82.0/86.0	0.78/0.92	3.4/12.8	3.8/13.0	5.3/6.5	2.2/2.9	13.83	42.6
AMV 132M CA	**4/2**	1.9/8.0	2.6/10.9	1450/2930	12.5/26.1	83.7/88.0	0.82/0.87	4.0/15.1	4.0/16.0	5.5/7.0	2.2/3.0	17.13	51.4
AMV 160M AA	**4/2**	2.8/11	3.8/15.0	1440/2940	18.6/35.7	82.5/88.2	0.78/0.90	6.3/20.0	7.0/20.4	5.0/7.5	2.0/2.1	51.75	94
AMV 160M BA	**4/2**	3.3/13.5 [1]	4.5/18.3 [1]	1440/2920	21.9/44.2	83.0/88.5	0.80/0.92	7.2/24.0	7.5/24.0	5.5/7.5	2.0/2.2	51.75	94
AMV 160L CA	**4/2**	4.4/18.5 [1]	6.0/25.1 [1]	1450/2940	29/60.1	85.5/89.5	0.83/0.92	9.0/32.5	9.5/33.0	5.5/7.5	2.0/2.2	64.0	108.7

Type		kW	HP	rpm	M_N Nm	η 100%	cos φ	I_N 400V	I_N 380-420V	I_A/I_N	M_A/M_N	J 10^{-3} kgm²	kg
750/1500 rpm (8/4 poles) - Dahlander connection Y/YY													
AMV 71Z AA	**8/4**	0.08/0.37	0.11/0.5	660/1370	1.2/2.6	26/57	0.63/0.72	0.60/1.25	0.65/1.35	2.8/3.4	1.9/1.7	1.24	6.8
AMV 80Z AA	**8/4**	0.12/0.55	0.16/0.75	685/1420	1.7/3.7	50/69	0.60/0.74	0.58/1.53	0.65/1.6	1.9/3.3	1.4/1.5	2.47	9.2
AMV 80Z BA	**8/4**	0.18/0.75	0.25/1.0	660/1380	2.6/5.2	53/67	0.73/0.81	0.65/1.9	0.7/2.0	2.0/3.5	1.6/1.7	2.41	10.6
AMV 90L AA	**8/4**	0.18/1.1	0.25/1.5	680/1400	2.5/7.5	60/70	0.65/0.82	0.9/2.7	1.0/2.8	2.8/4.0	1.5/2.0	2.98	15.7
AMV 90L CA	**8/4**	0.4/1.6	0.54/2.15	675/1400	5.7/10.9	61.5/75	0.64/0.79	1.8/4.0	1.8/4.1	3.1/5.0	1.6/2.2	3.70	19.6
AMV 100L AA	**8/4**	0.45/2.2	0.60/3.0	680/1420	6.3/14.8	63.1/75.3	0.60/0.80	1.7/5.0	1.9/5.3	2.7/4.7	1.7/2.0	5.58	21.9
AMV 100L BA	**8/4**	0.6/2.6	0.80/3.5	680/1435	8.4/17.3	64.0/76.2	0.63/0.75	2.2/6.5	2.3/6.7	2.7/4.8	1.7/2.2	6.00	23.7
AMV 112M AA	**8/4**	0.7/3.3	0.94/4.5	690/1420	9.7/22.2	62/78	0.70/0.80	2.2/7.4	2.3/7.6	3.4/6.5	1.8/2.4	16.70	34.2
AMV 112M CA	**8/4**	1.0/4.0	1.34/5.5	720/1420	13.3/26.9	60/77	0.70/0.82	3.1/8.6	3.3/9.0	3.5/5.0	2.3/1.9	19.50	40.0
AMV 132S AA	**8/4**	1.1/4.5	1.5/6.1	725/1450	14.5/29.6	77.0/85.5	0.58/0.82	3.6/9.3	4.0/9.7	3.5/5.4	2.2/2.7	22.4	41.9
AMV 132M BA	**8/4**	1.4/5.5	1.9/7.5	720/1440	18.6/36.5	78.0/86.0	0.62/0.82	4.2/11.3	4.5/12	3.6/5.5	2.0/2.5	29.25	51.0
AMV 132M CA	**8/4**	1.8/7.5	2.4/10.2	720/1450	23.9/49.4	78.2/86.5	0.64/0.86	5.2/14.6	5.5/15.0	4.6/6.0	2.0/2.5	37.25	65.0
AMV 160M ZA	**8/4**	2.2/10.0	3.0/13.0	720/1450	29.2/65.9	80.0/88.0	0.61/0.83	6.6/19.9	6.8/20.4	3.5/6.0	1.8/1.7	81.25	88.5
AMV 160L ZA	**8/4**	3.2/15.0 [1]	4.3/20.0 [1]	720/1450	42.4/98.8	81.0/90.0	0.61/0.88	9.4/27.3	9.8/28	3.5/6.5	1.7/1.8	105.75	106.5

1) Temperature rise to class F

DESIGNED FOR RANGE
OF RATED VOLTAGE
380-420 V ± 5% - 50 HZ

FOR MAINS VOLTAGE
400 V - 50 HZ

TEMPERATURE RISE TO CLASS B

Type		kW	HP	rpm	M_N Nm	η 100%	cos φ	I_N 400V	I_N 380-420V	I_A/I_N	M_A/M_N	J 10^{-3} kgm²	kg
1500/1000 rpm (4/6 poles) - separate windings													
AMV 71Z AA	**4/6**	0.25/0.08	0.33/0.11	1370/900	1.7/0.4	60/40	0.80/0.70	0.75/0.4	0.8/0.45	3.0/2.5	1.6/1.6	1.15	6.7
AMV 71Z BA	**4/6**	0.37/0.13	0.50/0.18	1360/880	2.6/1.4	62/44	0.80/0.70	1.0/0.6	1.1/0.7	3.2/2.6	1.6/1.6	1.24	7.2
AMV 80Z AA	**4/6**	0.55/0.18	0.75/0.25	1380/920	3.8/1.9	60/42	0.83/0.82	1.60/0.75	1.7/0.8	3.5/2.4	1.6/1.0	1.97	8.3
AMV 80Z BA	**4/6**	0.75/0.25	1.0/0.33	1400/940	5.1/2.5	70/60	0.82/0.72	1.8/0.8	1.9/0.9	4.2/2.6	1.6/1.3	4.05	14
AMV 90S AA	**4/6**	0.75/0.24	1.0/0.32	1400/950	5.1/2.4	70/60	0.82/0.72	1.9/0.8	2.0/0.9	4.2/2.6	1.6/1.3	4.05	14
AMV 90L BA	**4/6**	1.1/0.37	1.5/0.50	1400/930	7.5/3.8	70/60	0.81/0.74	2.8/1.2	3.0/1.3	4.3/2.7	1.6/1.2	4.78	16.4
AMV 90L CA	**4/6**	1.5/0.5	2.0/0.67	1420/950	10.1/5	73/64	0.80/0.70	3.52/1.52	3.7/1.6	4.8/2.6	1.5/1.3	5.98	20.5
AMV 100L AA	**4/6**	1.85/0.60	2.5/0.75	1400/920	12.6/6.2	74/64	0.80/0.73	4.6/1.9	4.8/2.1	4.8/3.1	1.8/1.5	6.73	23.4
AMV 100L BA	**4/6**	2.2/0.75	3.0/1.0	1420/950	14.8/7.5	76/66	0.79/0.75	5.1/2.1	5.3/2.2	5.0/3.5	1.7/1.3	9.25	22.6
AMV 112M AA	**4/6**	3/1.0	4.0/1.34	1440/970	19.9/9.8	80/73	0.81/0.65	6.6/3.0	6.8/3.2	5.8/4.6	2.5/2.1	13.3	30.4
AMV 132S AA	**4/6**	3.8/1.3	5.2/1.8	1460/970	24.9/12.8	85.0/75.0	0.8/0.72	8.1/3.5	8.5/4	6.5/4.0	2.2/1.7	22.4	41.9
AMV 132M BA	**4/6**	4.4/1.5	6.0/2.0	1460/970	28.8/14.8	86.0/78.2	0.85/0.73	8.7/3.8	9.2/4.3	6.5/4.4	2.2/1.7	29.25	51.0
AMV 132M CA	**4/6**	5.5/1.8	7.5/2.4	1460/970	36/17.7	86.8/80.0	0.84/0.74	10.9/4.4	12.0/4.	7.0/4.7	2.6/1.8	37.25	65.0
AMV 132M DA	**4/6**	6.3/2.2 [1]	8.6/3.0 [1]	1460/970	41.2/21.7	86.8/81.0	0.84/0.73	12.5/5.4	13.5/5.	7.2/4.8	2.6/1.9	37.25	66.0
AMV 160M AA	**4/6**	7.5/2.5	10.0/3.4	1470/975	48.7/24.5	87.5/83.0	0.83/0.75	14.9/5.8	15.6/6.0	8.3/4.5	2.5/1.9	81.25	88.5
AMV 160L BA	**4/6**	11.0/3.7	15.0/5.0	1470/970	71.5/36.4	88.0/84.2	0.81/0.73	22.5/8.7	23.4/9.0	8.0/4.8	2.4/1.8	105.75	106.5
AMV 160L CA	**4/6**	13.0/4.0 [1]	17.7/5.4 [1]	1460/970	85/39.4	88.0/84.5	0.81/0.72	26.3/9.5	27.5/10	8.0/4.8	2.4/1.9	105.75	106.5

Type		kW	HP	rpm	M_N Nm	η 100%	cos φ	I_N 400V	I_N 380-420V	I_A/I_N	M_A/M_N	J 10^{-3} kgm²	kg
1000/750 rpm (6/8 poles) - separate windings													
AMV 80Z AA	**6/8**	0.25/0.11	0.33/0.15	930/720	2.6/1.5	53/49	0.79/0.62	0.9/0.55	1.0/0.7	2.9/3.0	1.6/1.8	1.97	7.9
AMV 80Z BA	**6/8**	0.37/0.15	0.50/0.25	920/715	3.8/2	52/47	0.81/0.63	1.3/0.8	1.4/0.9	2.8/2.8	1.4/1.9	2.47	9.5
AMV 90L AA	**6/8**	0.55/0.22	0.75/0.30	960/740	5.5/2.8	65/47	0.62/0.51	2.0/1.4	2.1/1.5	3.9/2.9	2.5/2.1	4.78	16.2
AMV 90L BA	**6/8**	0.75/0.30	1.0/0.40	940/720	7.6/4	64/45.5	0.67/0.52	2.5/1.85	2.7/1.9	3.4/2.6	2.2/1.9	4.78	16.2
AMV 100L AA	**6/8**	1.1/0.45	1.5/0.60	950/710	11.1/6.1	70.6/58	0.71/0.67	3.1/1.7	3.3/1.8	4.3/2.8	2.0/1.3	9.43	22.0
AMV 112M AA	**6/8**	1.5/0.6	2.0/0.80	970/720	14.8/8	75.8/65	0.65/0.60	4.4/2.3	3.7/2.5	5.5/3.4	2.8/2.1	18.70	39.0
AMV 132S ZA	**6/8**	2.2/0.9	3.0/1.2	970/715	21.7/12	78.0/69.0	0.67/0.55	6.1/3.5	6.7/4.0	4.8/4.0	1.6/1.6	29.5	42.5
AMV 132M YA	**6/8**	3/1.2	4.0/1.6	960/715	29.8/16	80/72	0.7/0.55	7.8/4.4	8.2/4.8	4.8/4.1	1.6/1.6	37.75	55.5
AMV 132M ZA	**6/8**	4/1.6	5.5/2.2	960/715	39.8/21.4	81.0/74.0	0.78/0.6	9.2/5.2	9.8/5.6	5.3/4.4	1.7/1.7	44.5	64.1
AMV 160M YA	**6/8**	5.5/2.2	7.5/3.0	970/730	54.1/28.8	83/76	0.77/0.6	12.5/7	13.5/7.5	5.7/5.6	1.6/1.9	112.7	88.0
AMV 160M ZA	**6/8**	7/3	9.5/4.1	970/730	68.9/39.2	84/77	0.80/0.65	15/8.7	16/9.3	6.0/5.8	1.7/2.2	150.25	97.5

1) Temperature rise to class F

THREE-PHASE FRAME SIZE 80 - 160 IM B3
AMQE SERIES - ALUMINIUM ALLOY FRAME

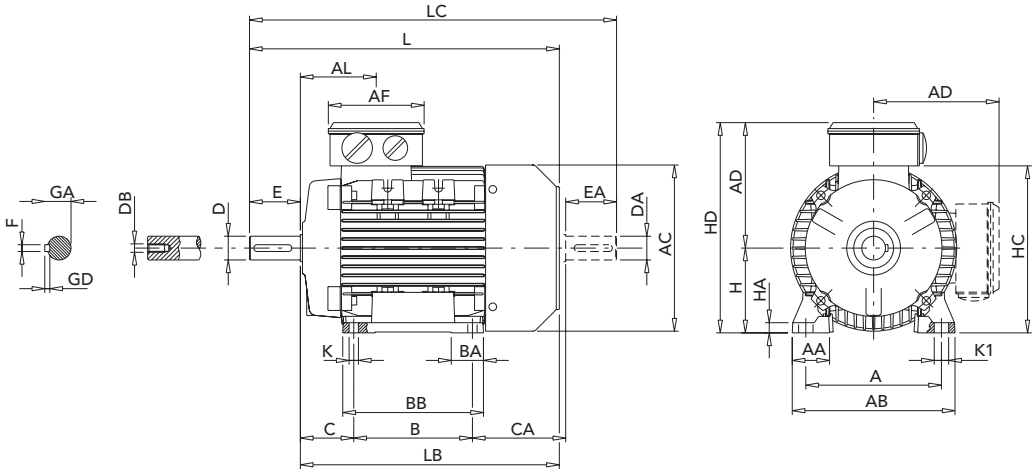

IEC	Poles	kW	H	A	B	C	K [1]	AB	BB	CA	AD [2]	HD [2]	AC	HC
80	**2**	**all**	80	125	100	50	10	153	125	89	129	209	160	162
90S	**2 - 4**	**all**	90	140	100	56	10	170	150	116	138	228	180	181
90L	**2**	**2.2**	90	140	125	56	10	170	150	114	138	228	180	181
	4	**1.1**	90	140	125	56	10	170	150	114	138	228	180	181
100L	**2**	**3**	100	160	140	63	11	192	166	110	145	245	196	198
	4 - 6	**all**	100	160	140	63	11	192	166	110	145	245	198	192
112M	**2**	**4**	112	190	140	70	12.5	220	176	126	160	272	225	225
	4-6	**all**	112	190	140	70	12.5	220	176	148	160	272	222	225
132S	**2**	**all**	132	216	140	89	12	256	180	184	196	328	248	261
	4	**4**	132	216	140	89	12	256	180	139	195	328	248	261
	4	**5.5**	132	216	140	89	12	256	180	234	195	328	248	261
	6	**3**	132	216	140	89	12	256	180	159	195	328	248	261
132M	**2-4**	**all**	132	216	178	89	12	256	218	216	195	328	248	261
	6	**4**	132	216	178	89	12	256	218	166	195	328	248	261
160M	**2 - 4 - 6**	**all**	160	254	210	108	14	320	270	180	238	398	317	316
160L	**4 - 6**	**all**	160	254	254	108	14	320	310	180	238	398	317	316
160L	**4**	**15**	160	254	254	108	14	320	310	206	238	398	317	316

1) Clearance hole for screw
2) Maximun distance
3) Centering holes in shaft extensions to DIN 332 part 2

THREE-PHASE FRAME SIZE 80 - 160 IM B3
AMQE SERIES - ALUMINIUM ALLOY FRAME

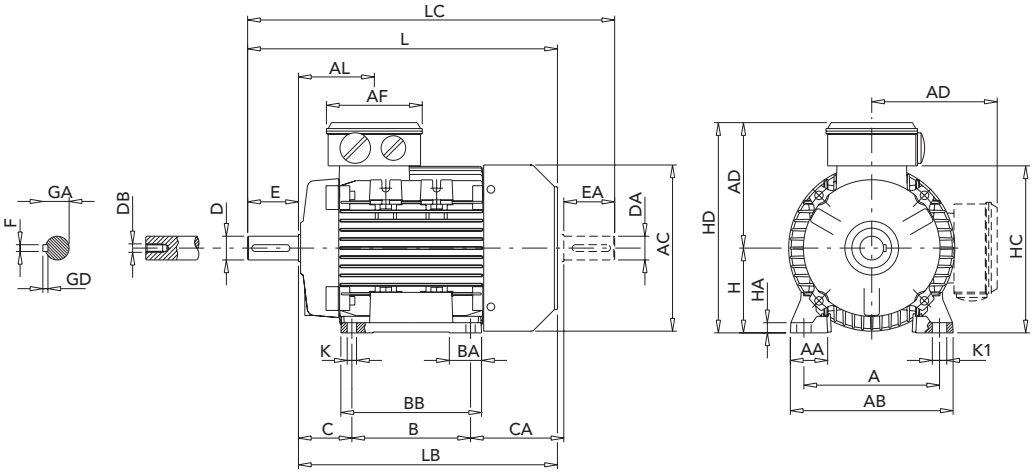

IEC	Poles	kW	HA	K1	L	LB	LC	AL	AF	BA	AA	D/DA	E/EA	F	GD	GA	DB[3]
80	**2**	**all**	9.5	14	272	232	319	79	116	28.5	34.5	19	40	6	6	21.5	M6
90S	**2 - 4**	**all**	11	15	317	267	372	85	116	28/53	37	24	50	8	7	27	M8
90L	**2**	**2.2**	11	15	340	290	395	85	116	28/53	37	24	50	8	7	27	M8
	4	**1.1**	11	15	340	290	395	85	116	28/53	37	24	50	8	7	27	M8
100L	**2**	**3**	12	17	366	306	433	91	116	38	44	28	60	8	7	31	M10
	4 - 6	**all**	12	17	366	306	433	92	118	41	44	28	60	8	7	31	M10
112M	**2**	**4**	15	19	388	328	456	92	116	46	48	28	60	8	7	31	M10
	4-6	**all**	15	19	410	350	478	92	116	46	48	28	60	8	7	31	M10
132S	**2**	**all**	17	20	485	405	573	100	137	45	59	38	80	10	8	41	M12
	4	**4**	17	20	445	365	528	100	137	45	59	38	80	10	8	41	M12
	4	**5.5**	17	20	536	456	623	120	137	45	59	38	80	10	8	41	M12
	6	**3**	17	20	465	385	548	100	137	45	59	38	80	10	8	41	M12
132M	**2-4**	**all**	17	20	556	476	643	120	137	45	59	38	80	10	8	41	M12
	6	**4**	17	20	505	425	593	120	137	45	59	38	80	10	8	41	M12
160M	**2 - 4 - 6**	**all**	23	18	608	498	668	146	155	65	76	42/28	110/60	12/8	8/7	45/31	M16/M10
160L	**4 - 6**	**all**	23	18	652	542	712	168	155	65	76	42/28	110/60	12/8	8/7	45/31	M16/M10
160L	**4**	**15**	23	18	678	568	738	168	155	65	76	42/28	110/60	12/8	8/7	45/31	M16/M10

1) Clearance hole for screw
2) Maximun distance
3) Centering holes in shaft extensions to DIN 332 part 2

THREE-PHASE FRAME SIZE 56 - 160 IM B3
AMPE SERIES - ALUMINIUM ALLOY FRAME

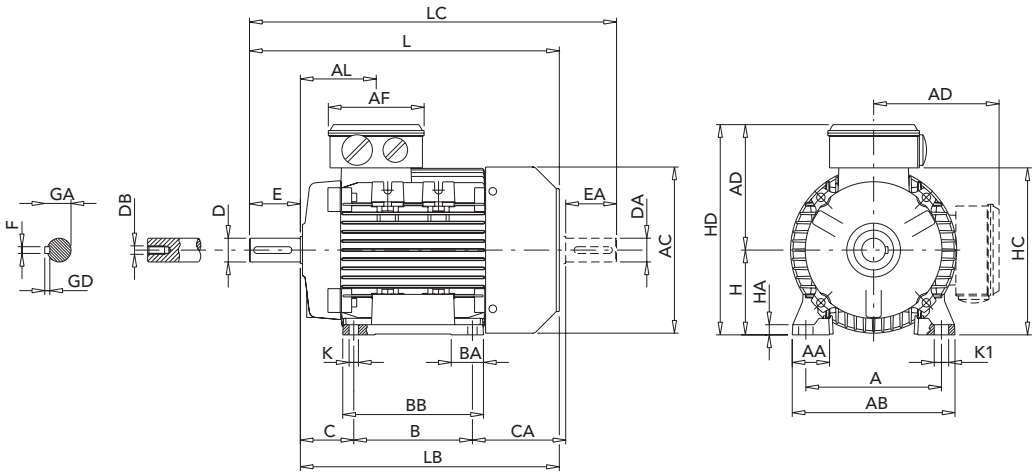

IEC	Poles	kW	H	A	B	C	K [1]	AB	BB	CA	AD [2]	HD [2]	AC	HC
56	**2 - 4**	**all**	56	90	71	36	6	107	86	64	92	148	110	109
63	**2 - 4**	**all**	63	100	80	40	7	120	100	72	96	159	124	120
71	**2 - 4 - 6**	**all**	71	112	90	45	8	135	108	83	110	181	139	142
80	**2 - 4**	**all**	80	125	100	50	10	153	125	89	129	209	160	162
90S	**2 - 4 - 6**	**all**	90	140	100	56	10	170	150	116	138	228	180	181
90L	**2**	**2.2**	90	140	125	56	10	170	150	91	138	228	180	181
	2	**3**	90	140	125	56	10	170	150	114	138	228	180	181
	4	**1.8**	90	140	125	56	10	170	150	114	138	228	180	181
	4 - 6	**all**	90	140	125	56	10	170	150	91	138	228	180	181
100L	**2**	**all**	100	160	140	63	11	192	166	110	145	245	196	198
	4 - 6	**all**	100	160	140	63	11	192	166	110	145	245	198	192
112M	**2**	**4 - 5.5**	112	190	140	70	12.5	220	176	126	160	272	225	225
	2	**7.5**	112	190	140	70	12.5	220	176	148	160	272	222	225
	4 - 6	**all**	112	190	140	70	12.5	220	176	126	160	272	225	225
132S	**2**	**5.5**	132	216	140	89	12	256	180	134	195	326	248	261
	2	**7.5**	132	216	140	89	12	256	180	154	195	326	248	261
	4	**5.5**	132	216	140	89	12	256	180	134	195	326	248	261
	6	**all**	132	216	140	89	12	256	180	134	195	326	248	261
132M	**2**	**9.2 - 11**	132	216	178	89	12	256	218	156	195	326	248	261
	2	**15**	132	216	178	89	12	256	218	207	195	326	248	261
	4	**7.5**	132	216	178	89	12	256	218	136	195	326	248	261
	4	**9.2**	132	216	178	89	12	256	218	156	195	326	248	261
	4	**11**	132	216	178	89	12	256	218	207	195	326	248	261
	6	**4**	132	216	178	89	12	256	218	136	195	326	248	261
	6	**5.5**	132	216	178	89	12	256	218	156	195	326	248	261
160M	**2 - 4 - 6**	**all**	160	254	210	108	14	320	270	180	238	398	317	316
160L	**2 - 4 - 6**	**all**	160	254	254	108	14	320	310	180	238	398	317	316

1) Clearance hole for screw
2) Maximun distance
3) Centering holes in shaft extensions to DIN 332 part 2

THREE-PHASE FRAME SIZE 56 - 160 IM B3
AMPE SERIES - ALUMINIUM ALLOY FRAME

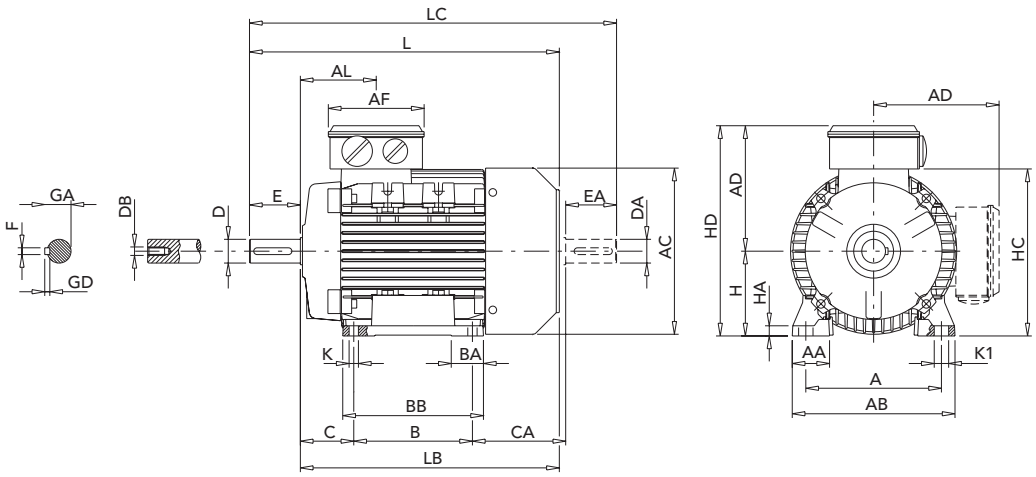

IEC	Poles	kW	HA	K1	L	LB	LC	AL	AF	BA	AA	D/DA	E/EA	F	GD	GA	DB[3]
56	**2 - 4**	**all**	8	9	188	168	211	61	92	27	27	9	20	3	3	10.2	M3
63	**2 - 4**	**all**	8	11	211	188	238	63	92	29	30	11	23	4	4	12.5	M4
71	**2 - 4 - 6**	**all**	9	11	246	216	278	69	92	28	31	14	30	5	5	16	M5
80	**2 - 4**	**all**	9.5	14	272	232	319	79	116	28.5	34.5	19	40	6	6	21.5	M6
90S	**2 - 4 - 6**	**all**	11	15	317	267	372	85	116	28/53	37	24	50	8	7	27	M8
90L	**2**	**2.2**	11	15	317	267	372	85	116	28/53	37	24	50	8	7	27	M8
	2	**3**	11	15	340	290	395	85	116	28/53	37	24	50	8	7	27	M8
	4	**1.8**	11	15	340	290	395	85	116	28/53	37	24	50	8	7	27	M8
	4 - 6	**all**	11	15	317	267	372	85	116	28/53	37	24	50	8	7	27	M8
100L	**2**	**all**	12	17	366	306	433	91	116	38	44	28	60	8	7	31	M10
	4 - 6	**all**	12	17	366	306	433	92	118	41	44	28	60	8	7	31	M10
112M	**2**	**4 - 5.5**	15	19	388	328	456	92	116	46	48	28	60	8	7	31	M10
	2	**7.5**	15	19	410	350	478	92	116	46	48	28	60	8	7	31	M10
	4 - 6	**all**	15	19	388	328	456	92	116	46	48	28	60	8	7	31	M10
132S	**2**	**5.5**	17	20	445	365	523	100	137	45	59	38	80	10	8	41	M12
	2	**7.5**	17	20	465	385	543	100	137	45	59	38	80	10	8	41	M12
	4	**5.5**	17	20	445	365	523	100	137	45	59	38	80	10	8	41	M12
	6	**all**	17	20	445	365	523	100	137	45	59	38	80	10	8	41	M12
132M	**2**	**9.2 - 11**	17	20	505	425	583	120	137	45	59	38	80	10	8	41	M12
	2	**15**	17	20	556	476	640	120	137	45	59	38	80	10	8	41	M12
	4	**7.5**	17	20	485	405	563	120	137	45	59	38	80	10	8	41	M12
	4	**9.2**	17	20	505	425	583	120	137	45	59	38	80	10	8	41	M12
	4	**11**	17	20	556	476	640	120	137	45	59	38	80	10	8	41	M12
	6	**4**	17	20	485	405	563	120	137	45	59	38	80	10	8	41	M12
	6	**5.5**	17	20	505	425	583	120	137	45	59	38	80	10	8	41	M12
160M	**2 - 4 - 6**	**all**	23	18	608	498	668	146	155	65	76	42/28	110/60	12/8	8/7	45/31	M16/M10
160L	**2 - 4 -6**	**all**	23	18	652	542	712	168	155	65	76	42/28	110/60	12/8	8/7	45/31	M16/M10

1) Clearance hole for screw
2) Maximun distance
3) Centering holes in shaft extensions to DIN 332 part 2

THREE-PHASE FRAME SIZE 80 - 160 IM B3
AMPH SERIES - ALUMINIUM ALLOY FRAME

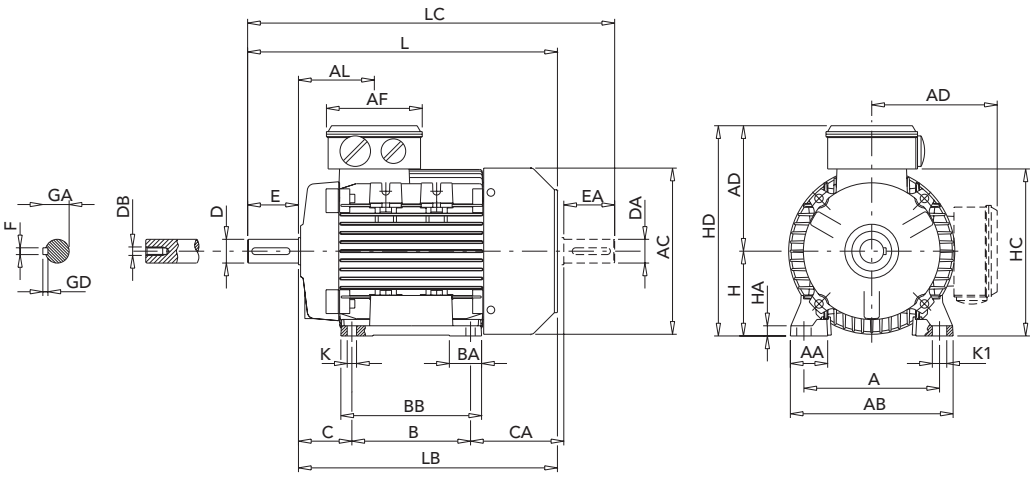

IEC	Poles	kW	H	A	B	C	K[1]	AB	BB	CA	AD[2]	HD[2]	AC	HC
80	**2 - 4**	**all**	80	125	100	50	10	153	125	89	140	220	160	162
90S	**2 - 4**	**all**	90	140	100	56	10	170	150	116	149	239	180	181
	6	**0.75**	90	140	100	56	10	170	150	116	149	239	180	181
90L	**2**	**2.2**	90	140	125	56	10	170	150	91	149	239	180	181
	2	**3**	90	140	125	56	10	170	150	114	138	239	180	181
	4	**all**	90	140	125	56	10	170	150	91	149	239	180	181
100L	**2**	**all**	100	160	140	63	11	192	166	110	156	256	196	198
	4 - 6	**all**	100	160	140	63	11	192	166	110	156	256	198	192
112M	**2**	**3.7-4-5.5**	112	190	140	70	12.5	220	176	126	172	284	225	225
	2	**7.5**	112	190	140	70	12.5	220	176	148	172	284	222	225
	4	**all**	112	190	140	70	12.5	220	176	126	172	284	225	225
	6	**1.1**	112	190	140	70	12.5	220	176	126	172	284	225	225
	6	**1.5 - 1.8**	112	190	140	70	12.5	220	176	148	172	284	222	225
132S	**2**	**5.5**	132	216	140	89	12	256	180	134	195	326	248	261
	2	**7.5**	132	216	140	89	12	256	180	154	195	326	248	261
	4	**5.5**	132	216	140	89	12	256	180	134	195	326	248	261
	6	**2.2-3**	132	216	140	89	12	256	180	154	195	326	248	261
132M	**2**	**9.2-11**	132	216	178	89	12	256	218	156	195	326	248	261
	2	**15**	132	216	178	89	12	256	218	207	195	326	248	261
	4	**7.5**	132	216	178	89	12	256	218	156	195	326	248	261
	4	**9.2**	132	216	178	89	12	256	218	207	195	326	248	261
	6	**4**	132	216	178	89	12	256	218	156	195	326	248	261
160M	**2-4-6**	**all**	160	254	210	108	14	320	270	180	238	398	317	316
160L	**2-4-6**	**all**	160	254	254	108	14	320	310	180	238	398	317	316
	4	**22**	160	254	254	108	14	320	310	206	238	398	317	316

1) Clearance hole for screw
2) Maximun distance
3) Centering holes in shaft extensions to DIN 332 part 2

THREE-PHASE FRAME SIZE 80 - 160 IM B3
AMPH SERIES - ALUMINIUM ALLOY FRAME

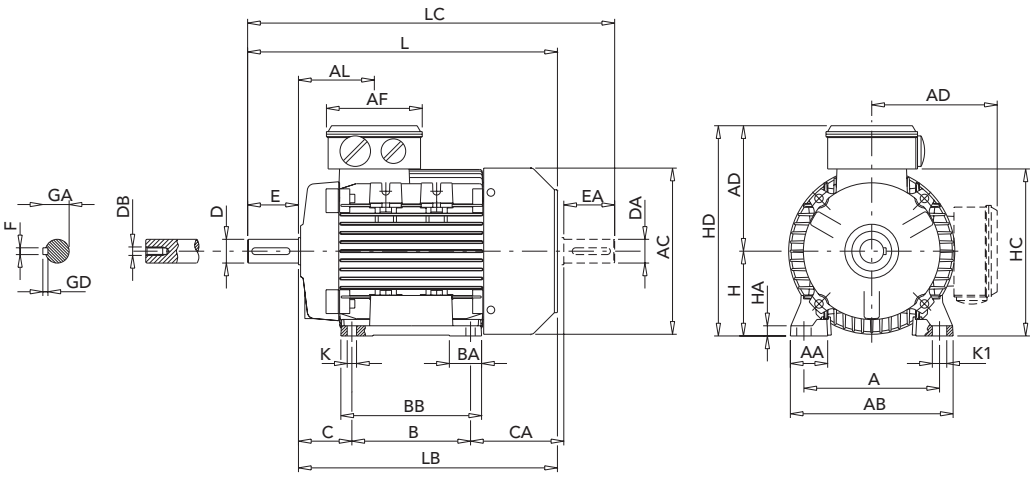

IEC	Poles	kW	HA	K1	L	LB	LC	AL	AF	BA	AA	D/DA	E/EA	F/FA	GD/GF	GA/GC	DB/DC[3]
80	**2 - 4**	**all**	9.5	14	272	232	319	79	116	28.5	34.5	19	40	6	6	21,5	M6
90S	**2 - 4**	**all**	11	15	317	267	372	85	116	28/53	37	24	50	8	7	27	M8
	6	**0.75**	11	15	317	267	372	85	116	28/53	37	24	50	8	7	27	M8
90L	**2**	**2.2**	11	15	317	267	372	85	116	28/53	37	24	50	8	7	27	M8
	2	**3**	11	15	340	290	395	85	116	28/53	37	24	50	8	7	27	M8
	4	**all**	11	15	317	267	372	85	116	28/53	37	24	50	8	7	27	M8
100L	**2**	**all**	12	17	366	306	433	91	110	38	44	28	60	8	7	31	M10
	4 - 6	**all**	12	17	366	306	433	92	118	41	44	28	60	8	7	31	M10
112M	**2**	**3.7-4-5.5**	15	19	388	328	456	92	116	46	48	28	60	8	7	31	M10
	2	**7.5**	15	19	410	350	478	92	116	46	48	28	60	8	7	31	M10
	4	**all**	15	19	388	328	456	92	116	46	48	28	60	8	7	31	M10
	6	**1.1**	15	19	388	328	456	92	116	46	48	28	60	8	7	31	M10
	6	**1.5 - 1.8**	15	19	410	350	478	92	116	46	48	28	60	8	7	31	M10
132S	**2**	**5.5**	17	20	445	365	523	100	137	45	59	38	80	10	8	41	M12
	2	**7.5**	17	20	465	385	543	100	137	45	59	38	80	10	8	41	M12
	4	**5.5**	17	20	445	465	523	100	137	45	59	38	80	10	8	41	M12
	6	**2.2-3**	17	20	465	385	543	100	137	45	59	38	80	10	8	41	M12
132M	**2**	**9.2-11**	17	20	505	425	583	120	137	45	59	38	80	10	8	41	M12
	2	**15**	17	20	556	476	640	120	137	45	59	38	80	10	8	41	M12
	4	**7.5**	17	20	485	405	563	120	137	45	59	38	80	10	8	41	M12
	4	**9.2**	17	20	505	425	583	120	137	45	59	38	80	10	8	41	M12
	6	**4**	17	20	505	425	583	120	137	45	59	38	80	10	8	41	M12
160M	**2-4-6**	**all**	23	18	608	498	668	146	155	65	76	42/28	110/60	12/8	8/7	45/31	M16/M10
160L	**2-4-6**	**all**	23	18	652	542	712	168	155	65	76	42/28	110/60	12/8	8/7	45/31	M16/M10
	4	**22**	23	18	678	568	738	168	155	65	76	42/28	110/60	12/8	8/7	45/31	M16/M10

1) Clearance hole for screw
2) Maximun distance
3) Centering holes in shaft extensions to DIN 332 part 2

THREE-PHASE FRAME SIZE 56-160 IM B3
AMHE SERIES - ALLUMINIUM ALLOY FRAME

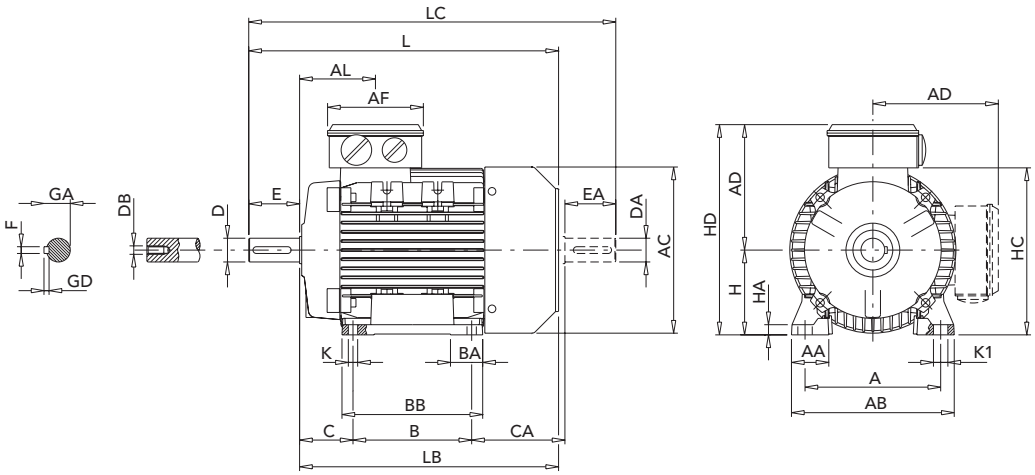

IEC	Poles	kW	H	A	B	C	K [1]	AB	BB	CA	AD [2]	HD [2]	AC	HC
56	**2 - 4**	**all**	56	90	71	36	6	107	86	64	92	148	110	109
63	**2 - 4**	**all**	63	100	80	40	7	120	100	72	96	159	124	120
71	**2 - 4**	**all**	71	112	90	45	8	135	108	83	110	181	139	142
80	**2 - 4**	**all**	80	125	100	50	10	153	125	89	129	209	160	162
90S	**2 - 4**	**all**	90	140	100	56	10	170	150	116	138	228	180	181
90L	**2**	**2.2**	90	140	125	56	10	170	150	91	138	228	180	181
	2	**3**	90	140	125	56	10	170	150	114	138	228	180	181
	4	**all**	90	140	125	56	10	170	150	91	138	228	180	181
100	**2**	**all**	100	160	140	63	11	192	166	110	145	245	196	198
	4	**2.2**	100	160	140	63	11	192	166	110	145	245	196	198
	4	**3**	100	160	140	63	11	192	166	125	145	245	194	198
112	**2**	**4 - 5.5**	112	190	140	70	12.5	220	176	126	160	272	225	225
	2	**7.5**	112	190	140	70	12.5	220	176	148	160	272	222	225
	4	**all**	112	190	140	70	12.5	220	176	126	160	272	225	225
132S	**2**	**5.5**	132	216	140	89	12	256	180	134	195	326	248	261
	2	**7.5**	132	216	140	89	12	256	180	154	195	326	248	261
	4	**5.5**	132	216	140	89	12	256	180	134	195	326	248	261
132M	**2**	**9.2 - 11**	132	216	178	89	12	256	218	156	195	326	248	261
	2	**15**	132	216	178	89	12	256	218	207	195	326	248	261
	4	**7.5 - 9.2**	132	216	178	89	12	256	218	136	195	326	248	261
	4	**11**	132	216	178	89	12	256	218	136	195	326	248	261
160M	**2 - 4**	**all**	160	254	210	108	14	320	270	180	238	398	317	316
160L	**2 - 4**	**all**	160	254	254	108	14	320	310	180	238	398	317	316

1) Clearance hole for screw
2) Maximun distance
3) Centering holes in shaft extensions to DIN 332 part 2

THREE-PHASE FRAME SIZE 56-160 IM B3
AMHE SERIES - ALLUMINIUM ALLOY FRAME

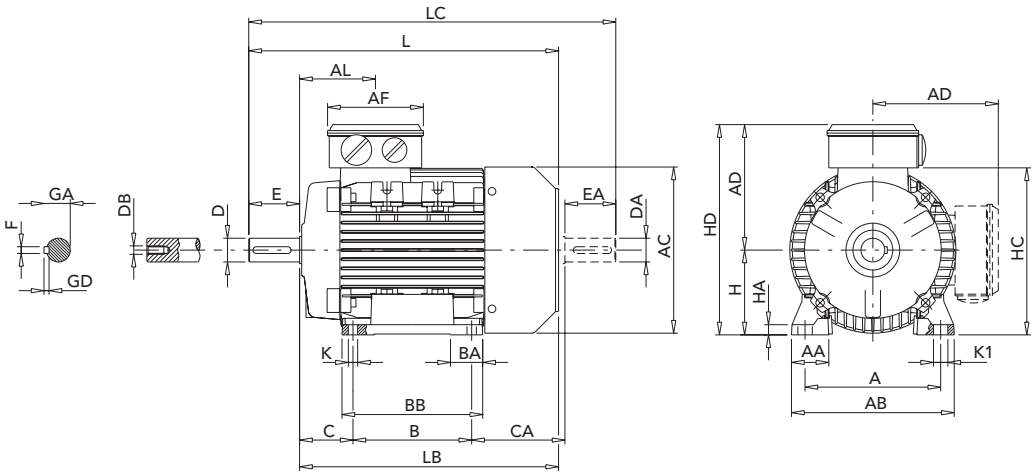

IEC	Poles	kW	HA	K1	L	LB	LC	AL	AF	BA	AA	D/DA	E/EA	F	GD	GA	DB[3]
56	**2 - 4**	**all**	8	9	188	168	211	61	92	27	27	9	20	3	3	10.2	M3
63	**2 - 4**	**all**	8	11	211	188	238	63	92	29	30	11	23	4	4	12.5	M4
71	**2 - 4**	**all**	9	11	246	216	278	69	92	28	31	14	30	5	5	16	M5
80	**2 - 4**	**all**	9.5	14	272	232	319	79	116	28.5	34.5	19	40	6	6	21.5	M6
90S	**2 - 4**	**all**	11	15	317	267	372	85	116	28/53	37	24	50	8	7	27	M8
90L	**2**	**2.2**	11	15	317	267	372	85	116	28/53	37	24	50	8	7	27	M8
	2	**3**	11	15	340	290	395	85	116	28/53	37	24	50	8	7	27	M8
	4	**all**	11	15	317	267	372	85	116	28/53	37	24	50	8	7	27	M8
100L	**2**	**all**	12	17	366	306	433	91	116	38	44	28	60	8	7	31	M10
	4	**2.2**	12	17	366	306	433	91	116	38	44	28	60	8	7	31	M10
	4	**3**	12	17	381	321	448	91	116	38	44	28	60	8	7	31	M10
112M	**2**	**4 - 5.5**	15	19	388	328	456	92	116	46	48	28	60	8	7	31	M10
	2	**7.5**	15	19	410	350	478	92	116	46	48	28	60	8	7	31	M10
	4	**all**	15	19	388	328	456	92	116	46	48	28	60	8	7	31	M10
132S	**2**	**5.5**	17	20	445	365	523	100	137	45	59	38	80	10	8	41	M12
	2	**7.5**	17	20	465	385	543	100	137	45	59	38	80	10	8	41	M12
	4	**5.5**	17	20	445	365	523	100	137	45	59	38	80	10	8	41	M12
132M	**2**	**9.2 - 11**	17	20	505	425	583	120	137	45	59	38	80	10	8	41	M12
	2	**15**	17	20	556	476	634	120	137	45	59	38	80	10	8	41	M12
	4	**7.5 - 9.2**	17	20	485	405	563	120	137	45	59	38	80	10	8	41	M12
	4	**11**	17	20	505	425	583	120	137	45	59	38	80	10	8	41	M12
160M	**2 - 4**	**all**	23	18	608	498	668	146	155	65	76	42/28	110/60	12/8	8/7	45/31	M16/M10
160L	**2 - 4**	**all**	23	18	652	542	712	168	155	65	76	42/28	110/60	12/8	8/7	45/31	M16/M10

1) Clearance hole for screw
2) Maximun distance
3) Centering holes in shaft extensions to DIN 332 part 2

THREE-PHASE FRAME SIZE 71-160 IM B3
AMEE SERIES - ALLUMINIUM ALLOY FRAME

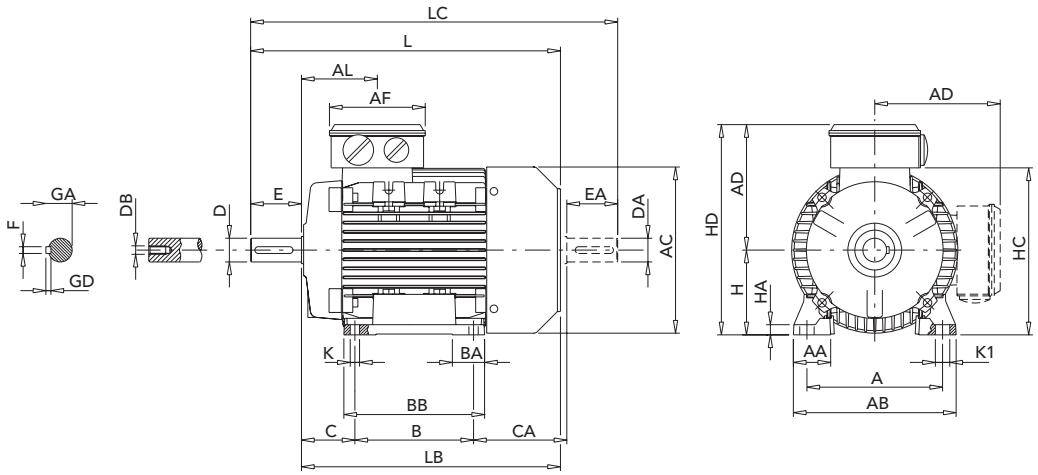

IEC	Poles	kW	H	A	B	C	K[1]	AB	BB	CA	AD[2]	HD[2]	AC	HC
71	**6**	**all**	71	112	90	45	8	135	107	83	110	181	139	142
80	**6**	**all**	80	125	100	50	10	153	125	89	129	209	160	162
90S	**6**	**all**	90	140	100	56	10	170	150	116	138	228	180	181
90L	**6**	**all**	90	140	125	56	10	170	150	91	138	228	180	181
100	**6**	**all**	100	160	140	63	11	192	166	110	145	245	196	198
112	**6**	**all**	112	190	140	70	12.5	220	176	126	160	272	225	225
132S	**6**	**3**	132	216	140	89	12	256	180	134	195	326	248	261
132M	**6**	**4**	132	216	178	89	12	256	218	136	195	326	248	261
	6	**5.5**	132	216	178	89	12	256	218	156	195	326	248	261
160M	**6**	**all**	160	254	210	108	14	320	270	180	238	398	317	316
160L	**6**	**all**	160	254	254	108	14	320	310	180	238	398	317	316

1) Clearance hole for screw
2) Maximun distance
3) Centering holes in shaft extensions to DIN 332 part 2

THREE-PHASE FRAME SIZE 71-160 IM B3
AMEE SERIES - ALLUMINIUM ALLOY FRAME

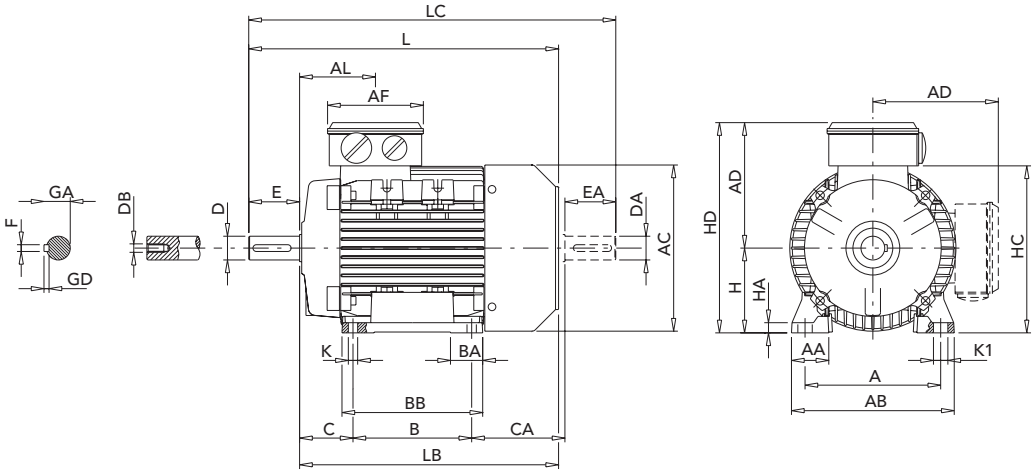

IEC	Poles	kW	HA	K1	L	LB	LC	AL	AF	BA	AA	D/DA	E/EA	F	GD	GA	DB[3]
71	**6**	**all**	9	11	246	216	278	69	92	28	31	14	30	5	5	16	M5
80	**6**	**all**	9.5	14	272	232	319	79	116	29	35	19	40	6	6	21.5	M6
90S	**6**	**all**	11	15	317	267	372	85	116	28/53	37	24	50	8	7	27	M8
90L	**6**	**all**	11	15	317	267	372	85	116	28/53	37	24	50	8	7	27	M8
100	**6**	**all**	12	17	366	306	433	91	116	38	44	28	60	8	7	31	M10
112	**6**	**all**	15	19	388	328	456	92	116	46	48	28	60	8	7	31	M10
132S	**6**	**3**	17	20	445	365	523	100	137	45	59	38	80	10	8	41	M12
132M	**6**	**4**	17	20	485	405	563	120	137	45	59	38	80	10	8	41	M12
	6	**5.5**	17	20	505	425	583	120	137	45	59	38	80	10	8	41	M12
160M	**6**	**all**	23	18	608	498	668	146	155	65	76	42/28	110/60	12/8	8/7	45/31	M16/M10
160L	**6**	**all**	23	18	652	542	712	168	155	65	76	42/28	110/60	12/8	8/7	45/31	M16/M10

1) Clearance hole for screw
2) Maximun distance
3) Centering holes in shaft extensions to DIN 332 part 2

THREE-PHASE FRAME SIZE 56 - 160 IM B3
AM SERIES - ALUMINIUM ALLOY FRAME

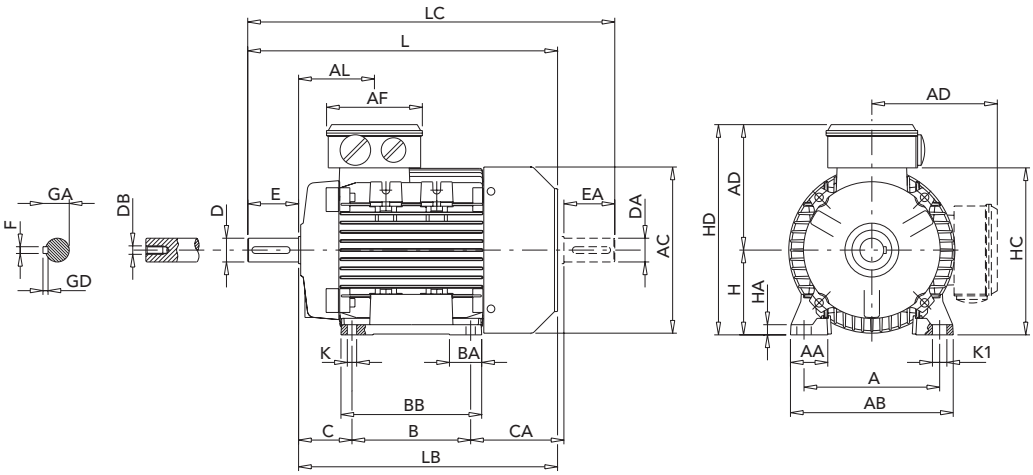

IEC	H	A	B	C	K [1]	AB	BB	CA	AD [2]	HD [2]	AC	HC	HA
56	56	90	71	36	6	107	86	64	92	148	110	109	8
63	63	100	80	40	7	120	100	72	96	159	124	120	8
71	71	112	90	45	8	135	108	83	110	181	139	142	9
80	80	125	100	50	10	153	125	89	129	209	160	162	9.5
90S	90	140	100	56	10	170	150	116	138	228	180	181	11
90L	90	140	125	56	10	170	150	91	138	228	180	181	11
100	100	160	140	63	11	192	166	110	145	245	196	198	12
112	112	190	140	70	12.5	220	175	126	161	273	225	226	15
132S	132	216	140	89	12	256	180	134	195	326	248	261	17
132M	132	216	178	89	12	256	218	136	195	326	248	261	17
132M [4]	132	216	178	89	12	256	218	156	195	326	248	261	17
160M	160	254	210	108	14	320	270	180	238	398	317	316	23
160L	160	254	254	108	14	320	310	180	238	398	317	316	23

IEC	K1	L	LB	LC	AL	AF	BA	AA	D/DA	E/EA	F	GD	GA	DB [3]
56	9	188	168	211	61	92	27	27	9	20	3	3	10.2	M3
63	11	211	188	238	63	92	29	30	11	23	4	4	12.5	M4
71	11	246	216	278	69	92	28	31	14	30	5	5	16	M5
80	14	272	232	319	79	116	28.5	34.5	19	40	6	6	21.5	M6
90S	15	317	267	372	85	116	28/53	37	24	50	8	7	27	M8
90L	15	317	267	372	85	116	28/53	37	24	50	8	7	27	M8
100L	17	366	306	433	91	116	38	44	28	60	8	7	31	M10
112M	19	388	328	456	91.5	116	46	48	28	60	8	7	31	M10
132S	20	445	365	523	102	137	45	59	38	80	10	8	41	M12
132M	20	485	405	563	122	137	45	59	38	80	10	8	41	M12
132M [4]	20	500	420	593	122	137	45	59	38	80	10	8	41	M12
160M	18	608	498	718	146	155	65	76	42	110	12	8	45	M16
160L	18	652	542	762	168	155	65	76	42	110	12	8	45	M16

1) Clearance hole for screw
2) Maximum dimension
3) Centering holes in shaft extensions to DIN 332 part 2
4) Only for MT A2

THREE-PHASE FRAME SIZE 56 - 160 IM B14, IM B5
AMQE-AMPE-AMPH-AMHE-AMEE-AM SERIES
ALUMINIUM ALLOY FRAME

IM B14

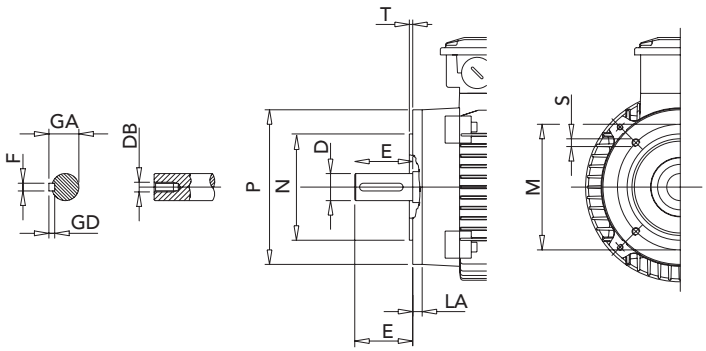

IM B5

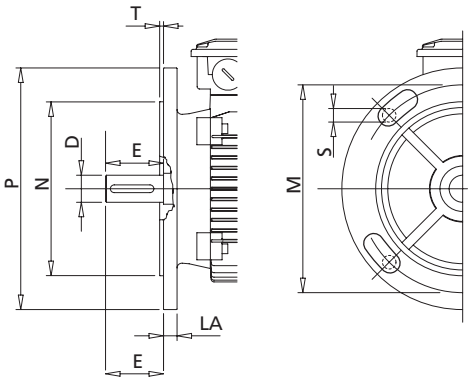

	FLANGE B14						OVERSIZED FLANGE B14[2]						FLANGE B5					
IEC	P	N	LA	M	T	S	P	N	LA	M	T	S	M	N	P	T	LA	S[1]
56	80	50	8	65	2.5	M5	105	70	8	85	2.5	M6	100	80	120	2.5	7	M6
63	90	60	8	75	2.5	M5	120	80	8	100	2.5	M6	115	95	140	3	8	M8
71	105	70	8	85	2.5	M6	140	95	8	115	3	M8	130	110	160	3.5	10	M8
80	120	80	9	100	3	M6	160	110	8.5	130	3.5	M8	165	130	200	3.5	10	M10
90	140	95	9	115	3	M8	160	110	9	130	3.5	M8	165	130	200	3.5	12	M10
100	160	110	10	130	3.5	M8	200	130	12	165	3.5	M10	215	180	250	4	14	M12
112	160	110	10	130	3.5	M8	200	130	12	165	3.5	M10	215	180	250	4	14	M12
132	200	130	23	165	3.5	M10	250	180	12	215	4	M12	265	230	300	4	14	M12
160	250	180	20	215	4	M12	300	230	12	265	5	M16	300	250	350	5	15	M16

1) Clearence hole for screw. Hole as standard for 132 to 160 frame size
2) Available on request. Please refer to price list "PL 1.1 - Optional features".

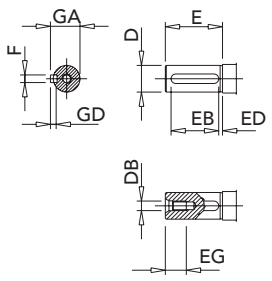

IEC	D	E	F h9	GD	GA	DB[1]	EG	EB	ED
56	9 j6	20	3	3	10.2	M3	10	15	2.5
63	11 j6	23	4	4	12.5	M4	10	15	4
71	14 j6	30	5	5	16	M5	12.5	20	4
80	19 j6	40	6	6	21.5	M6	16	30	4
90	24 j6	50	8	7	27	M8	19	40	4
100	28 j6	60	8	7	31	M10	22	50	4
112	28 j6	60	8	7	31	M10	22	50	4
132	38 k6	80	10	8	41	M12	28	70	4
160	42 k6	110	12	8	45	M16	36	100	4

1) Centering holes in shaft extension to DIN 332 part 2

THREE-PHASE FRAME SIZE 180 - 315 IM B3
AMQE - AMPE SERIES - CAST IRON FRAME

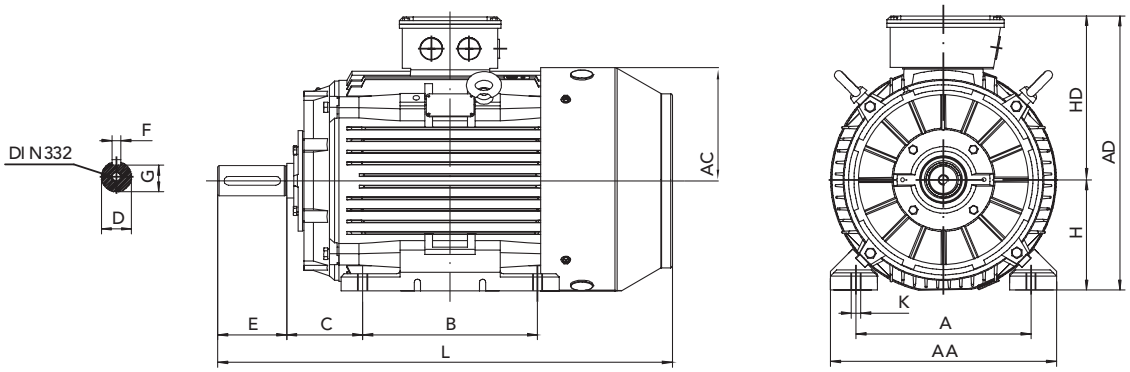

IEC	Poles	H	A	B	C	K	AD	HD	AC	L	AA	D	E	F	G
180M	**2-4-6**	180	279	241	121	15	451	271	355	661	349	48	110	14	42.5
180L	**2-4-6**	180	279	279	121	15	451	271	355	699	349	48	110	14	42.5
200	**2-4-6**	200	318	305	133	19	500	300	397	757	388	55	110	16	49
225S	**≥ 4**	225	356	286	149	19	548	323	445	798	431	60	140	18	53
225M	**2**	225	356	311	149	19	548	323	445	823	431	55	110	16	49
	≥ 4	225	356	311	149	19	548	323	445	823	431	60	140	18	53
250	**2**	250	406	349	168	24	609	359	485	900	484	60	140	18	53
	≥ 4	250	406	349	168	24	609	359	485	900	484	65	140	18	58
280S	**2**	280	457	368	190	24	691	411	569	979	542	65	140	18	58
	≥ 4	280	457	368	190	24	691	411	569	979	542	75	140	20	67.5
280M	**2**	280	457	419	190	24	691	411	569	1019	542	65	140	18	58
	≥ 4	280	457	419	190	24	691	411	569	1019	542	75	140	20	67.5
315S	**2**	315	508	406	216	28	837	522	620	1158	628	65	140	18	58
	≥ 4	315	508	406	216	28	837	522	620	1188	628	80	170	22	71
315M	**2**	315	508	457	216	28	837	522	620	1268	628	65	140	18	58
	≥ 4	315	508	457	216	28	837	522	620	1298	628	80	170	22	71
315L	**2**	315	508	508	216	28	837	522	620	1334	628	65	140	18	58
	≥ 4	315	508	508	216	28	837	522	620	1334	628	80	170	22	71

THREE-PHASE FRAME SIZE 180 - 315 IM B5
AMQE - AMPE SERIES - CAST IRON FRAME

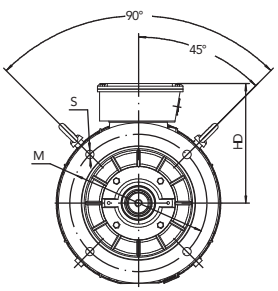

180-200

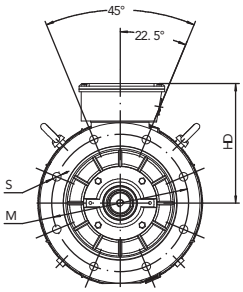

225-355

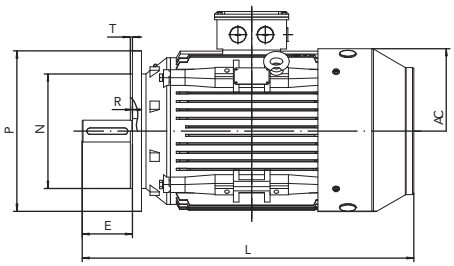

IEC	Poles	AC	HD	L	M	N	P	T	S	D	E	F	G
180M	**2-4-6**	355	271	699	300	250	350	5	18.5	48	110	14	42.5
180L	**2-4-6**	355	271	699	300	250	350	5	18.5	48	110	14	42.5
200	**2-4-6**	397	300	757	350	300	400	5	18.5	55	110	16	49
225S	≥ **4**	445	323	798	400	350	450	5	18.5	60	140	18	53
225M	**2**	445	323	793	400	350	450	5	18.5	55	110	16	49
	≥ **4**	445	323	823	400	350	450	5	18.5	60	140	18	53
250	**2**	485	359	900	500	450	550	5	18.5	60	140	18	53
	≥ **4**	485	359	900	500	450	550	5	18.5	65	140	18	58
280S	**2**	588	411	979	500	450	550	5	18.5	65	140	18	58
	≥ **4**	588	411	979	500	450	550	5	18.5	75	140	20	67.5
280M	**2**	588	411	1019	500	450	550	5	18.5	65	140	18	58
	≥ **4**	588	411	1019	500	450	550	5	18.5	75	140	20	67.5
315S	**2**	620	527	1194	600	550	660	6	24	65	140	18	58
	≥ **4**	620	527	1224	600	550	660	6	24	80	170	22	71
315M	**2**	620	527	1304	600	550	660	6	24	65	140	18	58
	≥ **4**	620	527	1334	600	550	660	6	24	80	170	22	71
315L	**2**	620	527	1304	600	550	660	6	24	65	140	18	58
	≥ **4**	620	527	1334	600	550	660	6	24	80	170	22	71

SINGLE-PHASE MOTORS

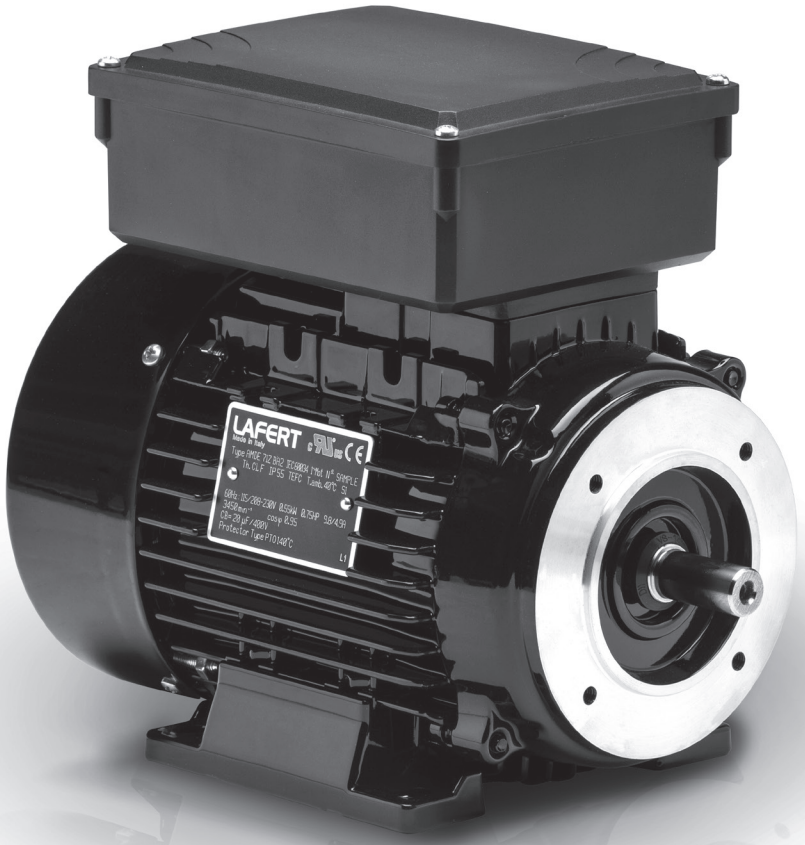

TERMINAL BOX

The location of the terminal box (viewed from drive end) in standard design is on top; on the right or on the left are possible.

Motors 70-100 frame size have removable feet for easy change of terminal box position.

For motors with mountings IM B6, IM B7, IM B8, IM V5, IM V6 the location of the terminal box is related to an IM B3 mounting.

The position of the entry openings can be adjusted to suit the existing connection facilities by turning through 90°. Should special accessories be used (temperature detectors, anti-condensation heating, etc.) please enquire.

For motors in standard design, the cable gland does not belong to our scope of delivery.

For plastic terminal boxes, only plastic glands may be used (shock protection).

The dimension tables always show the maximum distance to the outermost edge of the available terminal boxes. This maximum value may, however, be smaller, depending on the design of the terminal box. If the space for mounting is very limited, please enquire.

Direction of cable entries

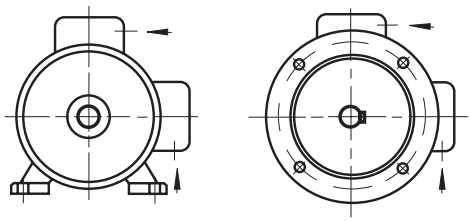

Frame size	Degree of protection	Thread for cable		Max. external cable diameter mm
		Metric [1]	Pg [2]	
56 - 71	IP 55	1 x M16	1 x Pg 11	12
80 -100	IP 55	1 x M20	1 x Pg 13.5	16

1) Pitch 1.5
2) Pg thread to DIN 40 430 (on request)

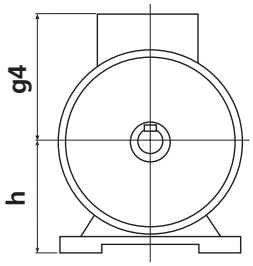

Terminal box on top

STANDARD DESIGN

Frame size h	g_4	A	B	Material
56	115	120	148	Plastic UL 94 V0
63	120	120	148	Plastic UL 94 V0
71	129	120	148	Plastic UL 94 V0
80	150	135	173	Plastic UL 94 V0
90	160	135	173	Plastic UL 94 V0
100	166	135	173	Plastic UL 94 V0

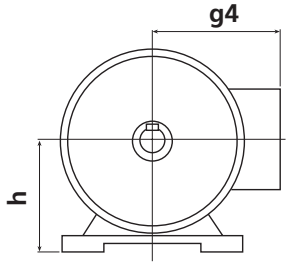

Terminal box at the side

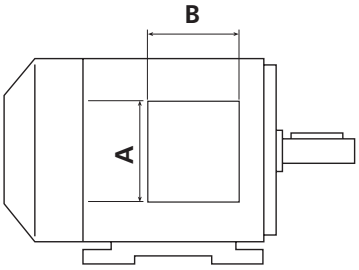

left [1)]

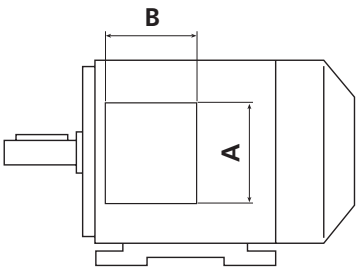

right

1) Frame size 80-100 the position of the terminal box is close to drive end

CONNECTION DIAGRAMS

Single-phase motors AMM/AMMHE and AMME/AMMEHE series are designed for single-rated voltage; motors AMD and AMDE series for dual voltage. The windings (main and auxiliary winding) are connected to the capacitor supplied with the motor.

The direction of rotation can be reversed by inverting the winding ends as follows:

- main winding for motors with one supply voltage
- auxiliary winding for dual voltage motors

SERIES AMM

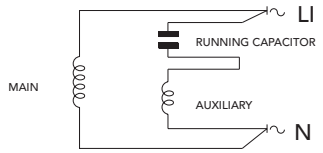

SERIES AMME

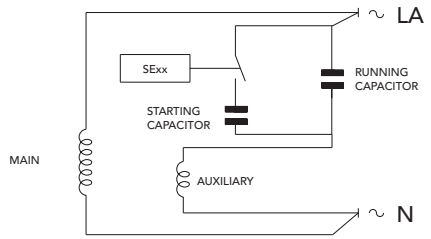

SExx - electronic device
for connection of starting capacitor

SERIES AMD

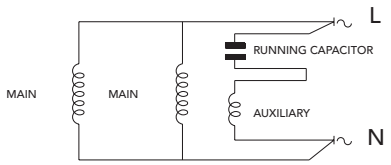

Connection at low voltage rate

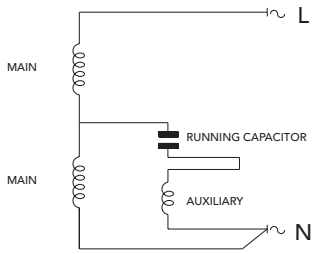

Connection at high voltage rate

SERIES AMDE

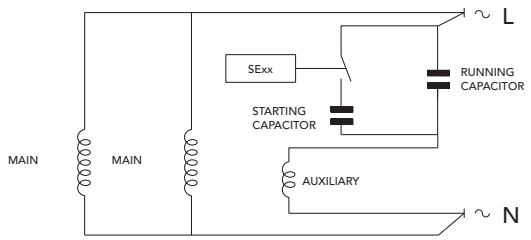

Connection at low voltage rate

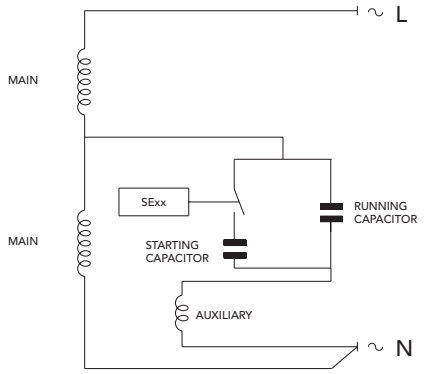

Connection at high voltage rate

The supplied capacitors are according to the following operating classes (refer to the marking on the capacitor case):

Operating classes and climatic categories IEC/EN 60252-1
Operating classes of capacitors for single-phase motors refer to EN 60252-1 Standards (June 2002) and are identified as follows:

a) Life expectancy

	30.000h Class a	10.000h Class B	3000h Class C	1000h Class D
Failure % max	3%	3%	3%	3%

b) Climatic category

25	/	85	/	21
Min. permissible temperature		Max. permissible temperature		Damp heat days

c) Class of safety protection

S0	No safety protection
S1	Safety achievable by external means (fuse)
S2	With internal safety protect

Misapplication, such as exceeding the design limits, use for applications different from those indicated in the catalogue or use for applications inappropriate for the characteristics of the capacitor used, may result in failure of the capacitor or in expulsion of the capacitor element from the case.

Normal end of life failure is characterized by loss of capacitance increase in dissipation factor and/or permanent open circuit.

The user is therefore cautioned to provide whatever additional protection or enclosure necessary to avoid possible damage or injury in case of failure.

ELECTRONIC STARTING DEVICE (SE XX)

Single-phase motors with one single capacitor generally have lower starting torques than the full load torque. When higher starting torques are required, the motor is equipped with an additional starting electrolytic capacitor. It is connected by the electronic starting device (SE XX) in the moment of starting and disconnected automatically proximate to the pull-out torque (see figure). At this point the torque characteristic for the running capacitor (characteristic 2) applies again.

Characteristic 1 is not reversible. The starting capacitor is reconnected only when restarting the motor. In case of overload, characteristic 2 has to be applied.

Time between stop and restart of the motor must be higher than 15 s.

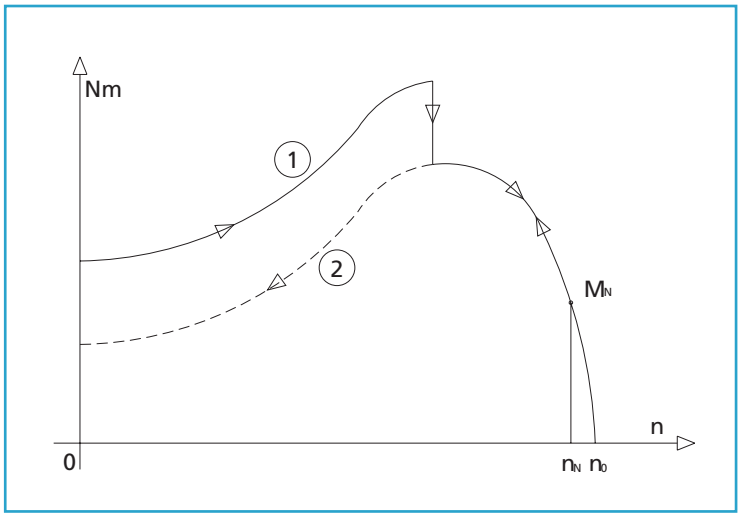

STARTING ELECTROLYTIC CAPACITORS

Electrolytic capacitors are normally employed in single-phase induction motors in order to increase the value of their starting torque. It is necessary that such starting should take place in a fraction of a second or at the most in a few seconds and with the contribution of an high reactive power.
Because of its reduced size, high capacitance value, the electrolytic capacitor is suitable for this type of application.

A typical duty cycle (refer to the marking on the nameplate) is the following:

3'/1.7%: 3s ON / 3min OFF

Misapplication, such as exceeding the design limits, use for applications different from those indicated in the catalogue or use for applications inappropriate for the characteristics of the capacitor used, may result in failure of the capacitor or in expulsion of the capacitor element from the case.

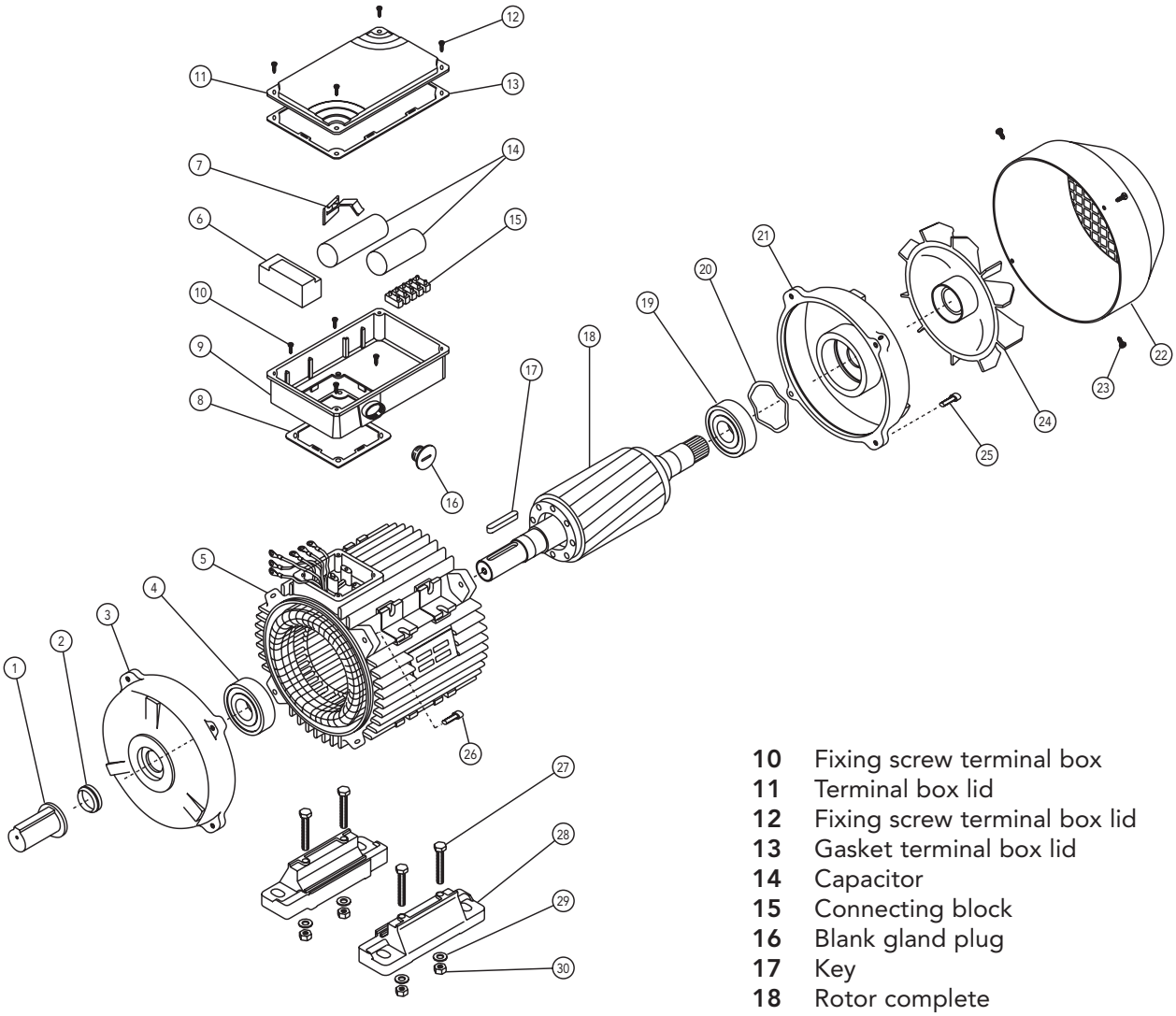

PART DESCRIPTION

1 Shaft protection
2 Dust seal drive end
3 Endshield drive end
4 Bearing drive end
5 Stator frame
6 Starter
7 Fixing device capacitor
8 Gasket terminal box
9 Terminal box
10 Fixing screw terminal box
11 Terminal box lid
12 Fixing screw terminal box lid
13 Gasket terminal box lid
14 Capacitor
15 Connecting block
16 Blank gland plug
17 Key
18 Rotor complete
19 Bearing non-drive end
20 Pre-load washer
21 Endshield non-drive end
22 Fan cover
23 Fixing screw fan cover
24 Fan
25 Fixing bolt endshield non-drive end
26 Fixing bolt endshield drive end
27 Fixing bolt motor feet
28 Motor feet
29 Fixing washer motor feet
30 Fixing nut motor feet

In enquires and orders for spare parts please state always:
Designation of spare part, motor type, mounting arrangement, motor serial number (Product No. (E-No.) when available)
Enquires and orders cannot be handled without these data.

TYPE DESIGNATION

Apart from other information, it is necessary to specify the exact type designation in all enquiries, when ordering spare parts or replacement motors or when asking for documentary information.

The type designation of our motors comprises 8 points of reference, each of which may consist of several letters and/or numerals. The meaning of each symbol can be seen from the following table. For motors not included in our standard range, special symbols may be used which are not listed here.

Ref. point	Meaning	Description of symbols used for our motors	
1	Type of motor	A	Asynchronous motor
2	Cooling	M	Surface cooled with external fan, cooling fins
3	Type of motor	M	Single-phase motor
		MHE	Single-phase motor, high efficiency IE2 code
		ME	Single-phase motor with starting capacitor
		MEHE	Single-phase motor with starting capacitor, high efficiency IE2 code
		D	Single-phase dual-voltage motor
		DE	Single-phase dual-voltage motor with starting capacitor
4	Shaft centre height	56, 63, 71, 80, 90, 100	
5	Frame length	Z	
		S	Mechanical dimension (short)
		M	Mechanical dimension (medium)
		L	Mechanical dimension (long)
6	Mechanical design and output value	A	
		B	
		C	
		D	
7	Frame material	A	Aluminium frame
8	Number of poles	2	
		4	
		6	

Examples

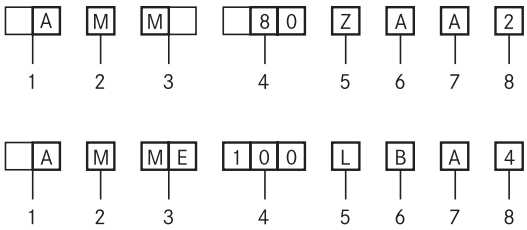

HIGH EFFICIENCY SINGLE-PHASE MOTORS - IE2

EFFICIENCY LEVEL ACCORDING TO IEC 60034-30-1:2014
EFFICIENCY TESTING METHOD IEC 60034-2-1;2014

NOMINAL FULL LOAD EFFICIENCY ACCORDING TO IE2 CODE @ 230 V - 50 HZ

DESIGNED FOR RANGE
OF RATED VOLTAGE
220-240 V ± 5% - 50 HZ

FOR MAINS VOLTAGE
230 V - 50 HZ

IE2

Type		kW	HP	rpm	M_N Nm	η 100%	cos φ	I_N 230V	I_A/I_N	M_A/M_N AMMHE*	M_K/M_N	J 10^{-3} kgm²	kg
3000 rpm (2 poles)													
AMMHE 56Z AA	**2**	0.12	0.16	2700	0.4	53.6	0.98	0.9	2.5	0.9	1.6	0.12	3.9
AMMHE 63Z XA	**2**	0.12	0.16	2850	0.4	53.6	0.93	0.9	3.3	0.9	1.9	0.14	5.0
AMMHE 63Z AA	**2**	0.18	0.25	2820	0.6	60.4	0.98	1.3	3.0	1.0	2.0	0.15	5.1
AMMHE 63Z BA	**2**	0.25	0.33	2780	0.9	64.8	0.99	1.7	2.9	0.9	1.7	0.18	5.7
AMMHE 71Z AA	**2**	0.37	0.5	2800	1.3	69.5	0.94	2.4	3.7	0.9	2.0	0.55	8.5
AMMHE 71Z BA	**2**	0.55	0.75	2890	1.8	74.1	0.99	3.2	4.3	0.7	2.1	0.57	8.6
AMMHE 80Z AA	**2**	0.75	1	2850	2.5	77.4	0.96	4.3	5.6	0.8	2.2	1.08	11.8
AMMHE 80Z BA	**2**	1.1	1.5	2790	3.8	79.6	0.97	6.4	3.9	0.7	2.0	1.10	12.0
AMMHE 90S AA	**2**	1.1	1.5	2865	3.7	79.6	0.93	6.5	4.8	0.4	2.0	1.87	17.3
AMMHE 90L BA	**2**	1.5	2	2870	5.0	81.3	0.95	8.5	4.9	0.5	2.2	2.09	18.7
AMMHE 90L CA	**2**	1.8	2.5	2840	6.1	82.2	0.98	9.9	4.6	0.5	2.0	2.11	19.3
AMMHE 90L DA	**2**	2.2	3	2920	7.2	83.2	0.97	11.8	5.3	0.4	2.1	2.20	19.7
AMMHE 100L XA	**2**	1.8	2.5	2900	5.9	82.2	0.98	9.5	6.9	0.4	2.8	7.30	26.5
AMMHE 100L AA	**2**	2.2	3	2890	7.3	83.2	0.99	11.6	6.1	0.4	2.8	7.40	26.6
1500 rpm (4 poles)													
AMMHE 63Z AA	**4**	0.12	0.16	1360	0.8	59.1	0.99	0.9	2.1	0.8	1.4	0.34	4.9
AMMHE 63Z BA	**4**	0.18	0.25	1340	1.3	64.70	0.97	1.3	2.2	0.5	1.5	0.38	5.0
AMMHE 71Z XA	**4**	0.18	0.25	1390	1.2	64.7	0.98	1.2	2.7	0.7	1.5	1.08	8.5
AMMHE 71Z AA	**4**	0.25	0.33	1395	1.7	68.5	0.97	1.6	3.0	0.5	1.4	1.12	8.9
AMMHE 80Z AA	**4**	0.37	0.5	1445	2.4	72.7	0.97	2.2	4.2	0.4	1.7	2.70	12.8
AMMHE 80Z BA	**4**	0.55	0.75	1450	3.6	77.1	0.91	3.4	4.7	0.4	1.9	2.80	13.1
AMMHE 90S XA	**4**	0.75	1	1440	5.0	79.6	0.98	4.2	4.1	0.4	1.8	3.73	17.6
AMMHE 90L AA	**4**	1.1	1.5	1445	7.3	81.4	0.97	6.0	4.9	0.4	2.0	3.80	18.0
AMMHE 90L BA	**4**	1.5	2	1435	10.0	82.8	0.96	8.3	4.8	0.3	1.6	3.90	20.0

*AMMHE capcitor run configuration starting torque ratio, AMMEHE capacitor start capacitor run configuration starting torque ratio.
For 60 Hz IE2 motor please consult us

HIGH EFFICIENCY SINGLE-PHASE MOTORS - IE2 WITH STARTING CAPACITOR

EFFICIENCY LEVEL ACCORDING TO IEC 60034-30-1:2014
EFFICIENCY TESTING METHOD IEC 60034-2-1;2014

DESIGNED FOR RANGE OF RATED VOLTAGE 220-240 V ± 5% - 50 HZ

NOMINAL FULL LOAD EFFICIENCY ACCORDING TO IE2 CODE @ 230 V - 50 HZ

FOR MAINS VOLTAGE 230 V - 50 HZ

IE2

Type		kW	HP	rpm	M_N Nm	η 100%	cos φ	I_N 230V	I_A/I_N	M_A/M_N AMMEHE*	M_K/M_N	J 10^{-3} kgm²	kg
3000 rpm (2 poles)													
AMMEHE 56Z AA	**2**	0.12	0.16	2700	0.4	53.6	0.98	0.9	2.5	2.6	1.6	0.12	3.9
AMMEHE 63Z XA	**2**	0.12	0.16	2850	0.4	53.6	0.93	0.9	3.3	1.8	1.9	0.14	5.0
AMMEHE 63Z AA	**2**	0.18	0.25	2820	0.6	60.4	0.98	1.3	3.0	1.8	2.0	0.15	5.1
AMMEHE 63Z BA	**2**	0.25	0.33	2780	0.9	64.8	0.99	1.7	2.9	1.9	1.7	0.18	5.7
AMMEHE 71Z AA	**2**	0.37	0.5	2800	1.3	69.5	0.94	2.4	3.7	2.1	2.0	0.55	8.5
AMMEHE 71Z BA	**2**	0.55	0.75	2890	1.8	74.1	0.99	3.2	4.3	2.2	2.1	0.57	8.6
AMMEHE 80Z AA	**2**	0.75	1	2850	2.5	77.4	0.96	4.3	5.6	3.2	2.2	1.08	11.8
AMMEHE 80Z BA	**2**	1.1	1.5	2790	3.8	79.6	0.97	6.4	3.9	2.8	2.0	1.10	12.0
AMMEHE 90S AA	**2**	1.1	1.5	2865	3.7	79.6	0.93	6.5	4.8	2.4	2.0	1.87	17.3
AMMEHE 90L BA	**2**	1.5	2	2870	5.0	81.3	0.95	8.5	4.9	2.5	2.2	2.09	18.7
AMMEHE 90L CA	**2**	1.8	2.5	2840	6.1	82.2	0.98	9.9	4.6	1.8	2.0	2.11	19.3
AMMEHE 90L DA	**2**	2.2	3	2920	7.2	83.2	0.97	11.8	5.3	1.4	2.1	2.20	19.7
AMMEHE 100L XA	**2**	1.8	2.5	2900	5.9	82.2	0.98	9.5	6.9	2.1	2.8	7.30	26.5
AMMEHE 100L AA	**2**	2.2	3	2890	7.3	83.2	0.99	11.6	6.1	2.2	2.8	7.40	26.6
1500 rpm (4 poles)													
AMMEHE 63Z AA	**4**	0.12	0.16	1360	0.8	59.1	0.99	0.9	2.1	1.8	1.4	0.34	4.9
AMMEHE 63Z BA	**4**	0.18	0.25	1340	1.3	64.7	0.97	1.3	2.2	2.3	1.5	0.38	5.0
AMMEHE 71Z XA	**4**	0.18	0.25	1390	1.2	64.7	0.98	1.2	2.7	2.0	1.5	1.08	8.5
AMMEHE 71Z AA	**4**	0.25	0.33	1395	1.7	68.5	0.97	1.6	3.0	2.9	1.4	1.12	8.9
AMMEHE 80Z AA	**4**	0.37	0.5	1445	2.4	72.7	0.97	2.2	4.2	2.1	1.7	2.70	12.8
AMMEHE 80Z BA	**4**	0.55	0.75	1450	3.6	77.1	0.91	3.4	4.7	2.3	1.9	2.80	13.1
AMMEHE 90S XA	**4**	0.75	1	1440	5.0	79.6	0.98	4.2	4.1	1.9	1.8	3.73	17.6
AMMEHE 90L AA	**4**	1.1	1.5	1445	7.3	81.4	0.97	6.0	4.9	2.4	2.0	3.80	18.0
AMMEHE 90L BA	**4**	1.5	2	1435	10.0	82.8	0.96	8.3	4.8	1.8	1.6	3.90	20.0
AMMEHE 100L AA**	**4**	1.8	2.5	1470	11.7	83.5	0.94	9.8	5.3	1.4	1.5	10.70	25.0
AMMEHE 100L BA**	**4**	2.2	3	1465	14.3	84.3	0.95	11.9	5.1	1.0	1.5	13.30	27.5

*AMMHE capcitor run configuration starting torque ratio, AMMEHE capacitor start capacitor run configuration starting torque ratio.
**Available only with start capacitor run configuration.
For 60 Hz IE2 motor please consult us.

DESIGNED FOR RANGE
OF RATED VOLTAGE
220-240 V ± 5% - 50 HZ

FOR MAINS VOLTAGE
230 V - 50 HZ

Type		kW	HP	rpm	M_N Nm	η 100%	cos φ	I_N 230V	I_N 220-240V	I_A/I_N	M_A/M_N	M_K/M_N	J 10^{-3} kgm²	kg
3000 rpm (2 poles)														
AMM 56Z AA	**2**	0.12	0.16	2600	0.4	47	0.90	1.2	1.3	1.3	1.3	1.8	0.09	3
AMM 63Z AA	**2**	0.18	0.25	2710	0.6	58.5	0.98	1.2	1.3	3	1.2	1.8	0.14	5
AMM 63Z BA	**2**	0.25	0.33	2760	0.9	68.6	0.95	1.7	1.9	3.2	1	1.6	0.18	5.5
AMM 71Z AA	**2**	0.37	0.5	2780	1.3	57.6	0.89	3.1	3.3	3.1	0.8	1.9	0.41	7.1
AMM 71Z BA	**2**	0.55	0.75	2740	1.9	69	0.89	3.9	4.1	3.5	0.7	1.7	0.55	8.5
AMM 80Z AA	**2**	0.75	1	2800	2.6	65	0.95	5.3	5.5	4.1	0.6	2	1.05	11.4
AMM 80Z BA	**2**	1.1	1.5	2730	3.8	74	0.97	6.5	6.6	3.6	0.5	1.6	1.08	11.8
AMM 90S AA	**2**	1.1	1.5	2830	3.7	68	0.94	7.5	8	4	0.4	2	1.62	15.3
AMM 90L BA	**2**	1.5	2	2835	5.1	73	0.90	9.3	9.6	3.9	0.5	2.1	1.87	17.3
AMM 90L CA	**2**	1.8	2.5	2790	6.2	73	0.99	10.8	11.2	4	0.6	2	2.09	18.7
AMM 90L DA	**2**	2.2 [1]	3 [1]	2770	7.6	73	0.90	14.6	15.4	4.3	0.2	1.8	2.11	19.3
AMM 100L AA	**2**	2.2	3	2795	7.5	75	0.98	12.8	13.1	4.3	0.4	1.5	4.05	24.5
1500 rpm (4 poles)														
AMM 56Z AA	**4**	0.09	0.12	1340	0.6	45	0.89	1	1.1	1.9	0.5	1.2	0.14	3.5
AMM 63Z AA	**4**	0.12	0.16	1385	0.8	50	0.97	1	1.1	2.8	0.7	1.5	0.27	4.5
AMM 63Z BA	**4**	0.18	0.25	1280	1.3	50	0.97	1.6	1.7	2	0.8	1.2	0.34	4.9
AMM 71Z AA	**4**	0.25	0.33	1270	1.9	52.1	0.89	2.5	2.7	2.4	0.7	1.5	0.82	7.2
AMM 71Z BA	**4**	0.37	0.5	1370	2.6	62	0.88	2.8	3.1	2.9	0.8	1.2	1.08	8.5
AMM 80Z AA	**4**	0.37	0.5	1390	2.5	60	0.96	2.8	2.9	3.2	0.5	1.9	2	9.8
AMM 80Z BA	**4**	0.55	0.75	1390	3.8	67	0.88	4	4.2	3.2	0.5	1.8	2.41	11.3
AMM 80Z CA	**4**	0.75	1	1445	5.0	73	0.90	4.9	5.1	4.4	0.3	1.9	2.7	12.8
AMM 90L AA	**4**	1.1	1.5	1415	7.4	70	0.93	7.4	7.8	3.6	0.5	1.5	3.13	15.4
AMM 90L BA	**4**	1.5 [1]	2 [1]	1430	10.0	79	0.94	9	9.3	4.3	0.5	1.7	3.73	17.6
AMM 100L AA	**4**	1.8	2.5	1380	12.5	70	0.96	12	12.4	3.6	0.3	1.5	5.83	22.8
AMM 100L BA	**4**	2.2 [1]	3 [1]	1450	14.5	81	0.97	12.5	12.7	4.6	0.4	1.7	6	23.8
1000 rpm (6 poles)														
AMM 71Z AA	**6**	0.18	0.25	840	2.0	48.0	0.87	1.9	2	2.7	0.8	1.6	0.90	6.3
AMM 80Z AA	**6**	0.25	0.33	900	2.7	56	0.95	2.2	2.4	2.3	0.3	1.8	2	8.8
AMM 80Z BA	**6**	0.37	0.5	925	3.8	60	0.96	2.8	3	2.6	0.4	1.3	2.47	10
AMM 90L AA	**6**	0.55	0.75	950	5.5	72	0.95	3.4	3.5	3.4	0.4	1.2	5.2	16.5
AMM 90L BA	**6**	0.75	1	890	8.0	71	0.96	4.8	4.9	3.2	0.5	1.5	5.85	18
AMM 100L AA	**6**	1.1	1.5	950	11.1	69	0.96	7.1	7.7	2.9	0.2	1.3	6.73	19
AMM 100L BA	**6**	1.5 [1]	2 [1]	870	16.5	66	0.98	10	10.2	2.5	0.4	1.4	9.43	22.5

1) Temperature rise to class F

DESIGNED FOR RANGE
OF RATED VOLTAGE
220-240 V ± 5% - 50 HZ

FOR MAINS VOLTAGE
230 V - 50 HZ

Type		kW	HP	rpm	M_N Nm	η 100%	cos φ	I_N 230V	I_N 220-240V	I_A/I_N	M_A/M_N	M_K/M_N	J 10^{-3} kgm²	kg
3000 rpm (2 poles)														
AMME 63Z AA	**2**	0.12	0.16	2810	0.4	67.1	0.90	0.9	1	2.5	1.9	1.5	0.11	4.5
AMME 63Z BA	**2**	0.18	0.25	2800	0.6	58.5	0.98	1.2	1.3	3	1.6	1.8	0.14	5
AMME 63Z CA	**2**	0.25	0.33	2760	0.9	68.6	0.95	1.7	1.9	3.2	1.7	1.6	0.18	5.5
AMME 71Z AA	**2**	0.37	0.5	2780	1.3	57.6	0.89	3.1	3.3	3.1	2.5	1.9	0.41	7.1
AMME 71Z BA	**2**	0.55	0.75	2740	1.9	69	0.89	3.9	4.1	3.5	1.9	1.7	0.55	8.5
AMME 80Z AA	**2**	0.75	1	2800	2.6	65	0.95	5.3	5.5	5.3	2.9	2	1.05	11.4
AMME 80Z BA	**2**	1.1	1.5	2730	3.8	74	0.97	6.5	6.6	4	2.9	1.6	1.08	11.8
AMME 90S AA	**2**	1.1	1.5	2830	3.7	68	0.94	7.5	8	5.2	2.4	2	1.62	15.3
AMME 90L BA	**2**	1.5	2	2835	5.1	73	0.90	9.3	9.6	5.1	2.5	2.1	1.87	17.3
AMME 90L CA	**2**	1.8	2.5	2790	6.2	73	0.99	10.8	11.2	3.7	1.6	2.0	2.09	18.7
AMME 90L DA	**2**	2.2 [1]	3 [1]	2770	7.6	73	0.90	14.6	15.4	4	1.8	1.8	2.11	19.3
AMME 100L AA	**2**	2.2	3	2795	7.5	75	0.98	12.8	13.1	4.3	1.8	1.8	4.05	24.5
1500 rpm (4 poles)														
AMME 63Z AA	**4**	0.12	0.16	1385	0.8	50	0.97	1	1.1	2.8	1.2	1.5	0.27	4.5
AMME 63Z BA	**4**	0.18	0.25	1280	1.3	50	0.97	1.6	1.7	2	1.9	1.2	0.34	4.9
AMME 71Z AA	**4**	0.25	0.33	1270	1.9	52.1	0.89	2.5	2.7	2.4	3	1.5	0.82	7.2
AMME 71Z BA	**4**	0.29	0.39	1275	2.2	56.1	0.95	2.4	2.5	4	3	1.6	0.95	7.8
AMME 71Z CA	**4**	0.37	0.5	1370	2.6	62	0.88	2.8	3.1	2.9	2.5	1.2	1.08	8.5
AMME 80Z AA	**4**	0.37	0.5	1390	2.5	60	0.96	2.8	2.9	2.5	1.8	1.9	2	9.8
AMME 80Z BA	**4**	0.55	0.75	1390	3.8	67	0.88	4	4.2	3.3	2.3	1.8	2.41	11.3
AMME 80Z CA	**4**	0.75	1	1445	5.0	73	0.90	4.9	5.1	5.4	2.4	2	2.7	12.8
AMME 90L AA	**4**	1.1	1.5	1415	7.4	70	0.93	7.4	7.8	4.8	2	1.5	3.13	15.4
AMME 90L BA	**4**	1.5 [1]	2 [1]	1430	10.0	79	0.94	9	9.3	4.7	1.8	1.7	3.73	17.6
AMME 100L AA	**4**	1.8	2.5	1380	12.5	70	0.96	12	12.4	3.2	1.5	1.5	5.83	22.8
AMME 100L BA	**4**	2.2 [1]	3 [1]	1450	14.5	81	0.97	12.5	12.7	4.6	1	1.7	6	23.8
1000 rpm (6 poles)														
AMME 71Z AA	**6**	0.15	0.2	865	1.7	43	0.83	1.8	1.9	1.8	1.9	1.2	1.24	8
AMME 80Z AA	**6**	0.25	0.33	900	2.7	56	0.95	2.2	2.4	2.3	1.3	1.8	2	8.8
AMME 80Z BA	**6**	0.37	0.5	925	3.8	60	0.96	2.8	3	2.7	2	1.3	2.47	10
AMME 90L AA	**6**	0.55	0.75	950	5.5	72	0.95	3.4	3.5	3.8	2.5	1.2	5.2	16.5
AMME 90L BA	**6**	0.75	1	890	8.0	71	0.96	4.8	4.9	3	3.4	1.5	5.85	18
AMME 100L AA	**6**	1.1	1.5	950	11.1	69	0.96	7.1	7.7	2.4	1.4	1.3	6.73	19
AMME 100L BA	**6**	1.5 [1]	2 [1]	870	16.5	66	0.98	10	10.2	2.5	2	1.4	9.43	22.5

1) Temperature rise to class F

FOR MAINS VOLTAGE
115-230 V - 50 HZ

Type		kW	HP	rpm	M_N Nm	η 100%	cos φ	I_N 115-230V	I_A/I_N	M_A/M_N	M_K/M_N	J 10^{-3} kgm²	kg
3000 rpm (2 poles)													
AMD 63Z AA	**2**	0.11	0.15	2760	0.4	52	0.93	2-1	2.8	0.6	1.5	0.11	4.5
AMD 63Z BA	**2**	0.18	0.25	2800	0.6	55	0.98	2.9-1.45	3	0.5	1.6	0.14	5
AMD 63Z CA	**2**	0.24	0.32	2815	0.8	56	0.98	3.8-1.9	3.1	0.6	1.8	0.18	5.5
AMD 71Z AA	**2**	0.37	0.5	2730	1.3	55	0.90	6.6-3.3	3.3	0.9	2	0.41	7.1
AMD 71Z BA	**2**	0.55	0.75	2840	1.8	64	0.94	8-4	4.2	0.5	1.9	0.55	8.5
AMD 80Z AA	**2**	0.75	1	2800	2.6	60	0.78	13.8-7	3.5	0.4	2.1	1.05	11.4
AMD 80Z BA	**2**	1.1	1.5	2770	3.8	72	0.93	14.2-7.2	3.5	0.5	1.6	1.08	11.8
AMD 90S AA	**2**	1.1	1.5	2815	3.7	70	0.78	17.5-8.8	3.8	0.4	1.9	1.62	15.3
AMD 90L BA	**2**	1.5	2	2800	5.1	69	0.87	22-11	3.6	0.4	1.8	1.87	17.3
AMD 90L CA	**2**	1.8	2.5	2810	6.1	70	0.89	25-12.5	3.7	0.3	1.9	2.09	18.7
AMD 90L DA	**2**	2.2 [1]	3 [1]	2880	7.3	76	0.93	27.2-13.6	5	0.3	1.9	2.10	19.3
AMD 100L AA	**2**	2.2	3	2810	7.5	75	0.92	28-14	4.6	0.2	1.8	4.05	24.5
1500 rpm (4 poles)													
AMD 63Z AA	**4**	0.11	0.15	1370	0.8	53	0.89	2.2-1.1	2	0.8	1.6	0.27	4.5
AMD 63Z BA	**4**	0.18	0.25	1340	1.3	51	0.9	3.3-1.7	1.9	0.6	1.3	0.34	4.9
AMD 71Z AA	**4**	0.24	0.32	1300	1.8	51	0.81	5.1-2.55	2.5	0.7	1.4	0.82	7.2
AMD 71Z BA	**4**	0.29	0.39	1340	2.1	61	0.84	4.9-2.45	2.6	0.6	1.6	0.95	7.8
AMD 71Z CA	**4**	0.37	0.5	1370	2.6	58	0.85	6.5-3.25	3.4	0.5	1.5	1.08	8.5
AMD 80Z AA	**4**	0.37	0.5	1375	2.6	54	0.94	6.3-3.15	2.5	0.7	1.5	2	9.8
AMD 80Z BA	**4**	0.55	0.75	1360	3.9	66	0.84	8.6-4.3	3.4	0.6	1.7	2.41	11.3
AMD 80Z CA	**4**	0.75	1	1435	5.0	62	0.91	11.5-5.75	4.1	0.4	1.9	2.7	12.8
AMD 90L AA	**4**	1.1	1.5	1425	7.4	69	0.81	17-8.5	3.9	0.3	1.9	3.13	15.4
AMD 90L BA	**4**	1.5 [1]	2 [1]	1415	10.1	72	0.88	20.5-10.25	3.4	0.3	1.4	3.73	17.6
AMD 100L AA	**4**	1.8	2.5	1430	12.0	70	0.86	26-13	3.2	0.3	1.6	5.83	22.8
AMD 100L BA	**4**	2.2 [1]	3 [1]	1440	14.6	72	0.86	31-15.5	3.2	0.2	1.3	6	23.8
1000 rpm (6 poles)													
AMD 71Z AA	**6**	0.15	0.2	910	1.6	58	0.80	2.8-1.4	2.2	0.5	1.4	1.24	8
AMD 80Z AA	**6**	0.25	0.33	930	2.6	61	0.85	4.2-2.1	2.3	0.4	1.2	2	8.8
AMD 80Z BA	**6**	0.37	0.5	940	3.8	61	0.82	6.4-3.2	2.9	0.4	1.6	2.47	10
AMD 90L AA	**6**	0.55	0.75	950	5.5	68	0.83	8.5-4.25	2.7	0.6	1.3	5.2	16.5
AMD 90L BA	**6**	0.75	1	950	7.5	58	0.79	14.2-7.1	3	0.4	1.6	5.85	18
AMD 100L AA	**6**	1.1	1.5	935	11.2	72	0.88	15-7.5	3.1	0.3	1.4	6.73	19
AMD 100L BA	**6**	1.5 [1]	2 [1]	890	16.1	74	0.98	18-9	2.9	0.5	1.4	9.43	22.5

1) Temperature rise to class F

FOR MAINS VOLTAGE
115-230V - 50 HZ

Type		kW	HP	rpm	M_N Nm	η 100%	cos φ	I_N 115-230V	I_A/I_N	M_A/M_N	M_K/M_N	J 10^{-3} kgm²	kg
3000 rpm (2 poles)													
AMDE 63Z AA	**2**	0.11	0.15	2760	0.4	52	0.93	2-1	2.8	1.9	1.5	0.11	4.5
AMDE 63Z BA	**2**	0.18	0.25	2800	0.6	55	0.98	2.9-1.45	3	1.6	1.6	0.14	5
AMDE 63Z CA	**2**	0.24	0.32	2815	0.8	56	0.98	3.8-1.9	3.1	1.8	1.8	0.18	5.5
AMDE 71Z AA	**2**	0.37	0.5	2730	1.3	55	0.90	6.6-3.3	3.3	2.5	2	0.41	7.1
AMDE 71Z BA	**2**	0.55	0.75	2840	1.8	64	0.94	8-4	4.2	1.3	2	0.55	8.5
AMDE 80Z AA	**2**	0.75	1	2800	2.6	60	0.78	13.8-7	3.5	1.3	2.2	1.05	11.4
AMDE 80Z BA	**2**	1.1	1.5	2770	3.8	72	0.93	14.2-7.2	3.5	1.4	1.6	1.08	11.8
AMDE 90S AA	**2**	1.1	1.5	2815	3.7	70	0.78	17.5-8.75	3.8	2.6	1.9	1.62	15.3
AMDE 90L BA	**2**	1.5	2	2800	5.1	69	0.87	22-11	3.6	2.6	1.8	1.87	17.3
AMDE 90L CA	**2**	1.8	2.5	2810	6.1	70	0.89	25-12.5	3.7	1.6	1.9	2.09	18.7
AMDE 90L DA	**2**	2.2	3	2880	7.3	76	0.93	27.2-13.6	5	2.5	1.9	2.10	19.3
AMDE 100L AA	**2**	2.2 [1]	3 [1]	2810	7.5	75	0.92	28-14	4.6	1.8	1.8	4.05	24.5
1500 rpm (4 poles)													
AMDE 63Z AA	**4**	0.11	0.15	1370	0.8	53	0.89	2.2-1.1	2	1.9	1.6	0.27	4.5
AMDE 63Z BA	**4**	0.18	0.25	1340	1.3	51	0.9	3.3-1.7	1.9	1	1.3	0.34	4.9
AMDE 71Z AA	**4**	0.24	0.32	1300	1.8	51	0.81	5.1-2.55	2.5	2.3	1.4	0.82	7.2
AMDE 71Z BA	**4**	0.29	0.39	1340	2.1	61	0.84	4.9-2.45	2.6	1.7	1.6	0.95	7.8
AMDE 71Z CA	**4**	0.37	0.5	1370	2.6	58	0.85	6.5-3.25	3.4	1.4	1.5	1.08	8.5
AMDE 80Z AA	**4**	0.37	0.5	1375	2.6	54	0.94	6.3-3.15	2.5	1.8	1.5	2	9.8
AMDE 80Z BA	**4**	0.55	0.75	1360	3.9	66	0.84	8.6-4.3	3.4	2.1	1.7	2.41	11.3
AMDE 80Z CA	**4**	0.75	1	1435	5.0	62	0.91	11.5-5.75	4.1	2	1.9	2.7	12.8
AMDE 90L AA	**4**	1.1	1.5	1425	7.4	69	0.81	17-8.5	3.9	2	1.9	3.13	15.4
AMDE 90L BA	**4**	1.5 [1]	2 [1]	1415	10.1	72	0.88	20.5-10.25	3.4	2	1.4	3.73	17.6
AMDE 100L AA	**4**	1.8	2.5	1430	12.0	70	0.86	26-13	3.2	2.1	1.6	5.83	22.8
AMDE 100L BA	**4**	2.2 [1]	3 [1]	1440	14.6	72	0.86	31-15.5	3.2	1.5	1.3	6	23.8
1000 rpm (6 poles)													
AMDE 71Z AA	**6**	0.15	0.2	910	1.6	58	0.80	2.8-1.4	2.2	1.9	1.4	1.24	8
AMDE 80Z AA	**6**	0.25	0.33	930	2.6	61	0.85	4.2-2.1	2.3	1.3	1.2	2	8.8
AMDE 80Z BA	**6**	0.37	0.5	940	3.8	61	0.82	6.4-3.2	2.9	1.9	1.6	2.47	10
AMDE 90L AA	**6**	0.55	0.75	950	5.5	68	0.83	8.5-4.25	2.7	3	1.3	5.2	16.5
AMDE 90L BA	**6**	0.75	1	950	7.5	58	0.79	14.2-7.1	3	3.4	1.6	5.85	18
AMDE 100L AA	**6**	1.1	1.5	935	11.2	72	0.88	15-7.5	3.1	1.9	1.4	6.73	19
AMDE 100L BA	**6**	1.5 [1]	2 [1]	890	16.1	74	0.98	18-9	2.9	2	1.4	9.43	22.5

1) Temperature rise to class F

SINGLE-PHASE FRAME SIZE 56 - 100 IM B5, IM B14
AMMHE - AMMEHE SERIES

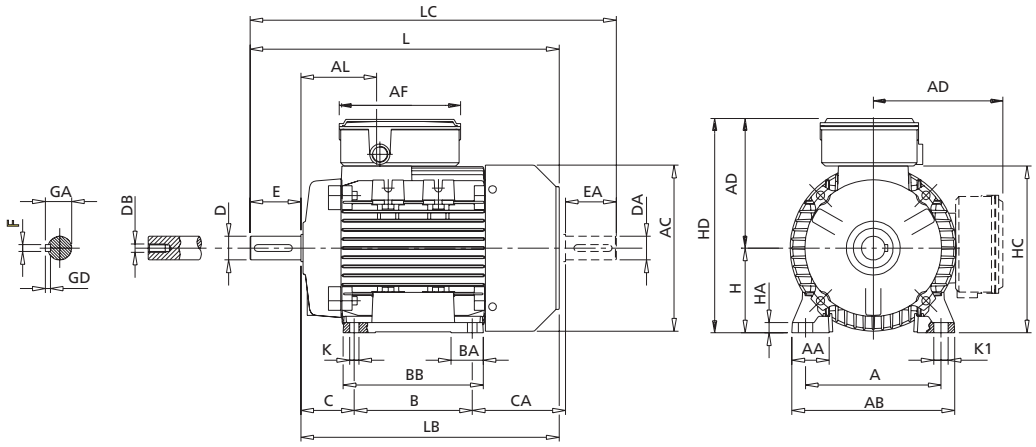

IEC	Poles	kW	H	A	B	C	K[1]	AB	BB	CA	AD[2]	HD[2]	AC	HC	HA	K1
56	2	all	56	90	71	36	6	107	86	64	116	172	110	109	8	9
63	2 – 4	all	63	100	80	40	7	120	100	72	120	183	124	120	8	11
71	2 – 4	all	71	112	90	45	8	135	108	83	134	205	139	142	9	11
80	2 – 4	all	80	125	100	50	10	153	125	89	150	230	160	162	9.5	14
90S	2 – 4	all	90	140	100	56	10	170	150	116	160	250	180	181	11	15
	2 – 4	all	90	140	125	56	10	170	150	91	160	250	180	181	11	15
90L	2	2.2	90	140	125	56	10	170	150	114	160	250	180	181	11	15
	4	1.5	90	140	125	56	10	170	150	114	160	250	180	181	11	15
100	2	all	100	160	140	63	11	192	166	110	166	266	196	198	12	17
	4	all	100	160	140	63	11	192	166	110	174	274	198	192	12	17

IEC	Poles	kW	L	LB	LC	AL	AF	BA	AA	D/DA	E/EA	F/FA	GD	GA/GC	DB[3]
56	2	all	188	168	211	61	147	27	27	9 j6	20	3	3	10.2	M3
63	2 – 4	all	211	188	238	63	147	29	30	11 j6	23	4	4	12.5	M4
71	2 – 4	all	246	216	278	69	147	28	31	14 j6	30	5	5	16	M5
80	2 – 4	all	272	232	319	79	173	28.5	34.5	19 j6	40	6	6	21.5	M6
90S	2 – 4	all	317	267	372	85	173	28/53	37	24 j6	50	8	7	27	M8
	2 – 4	all	317	267	372	85	173	28/53	37	24 j6	50	8	7	27	M8
90L	2	2.2	340	290	395	85	173	28/53	37	24 j6	50	8	7	27	M8
	4	1.5	340	290	395	85	173	28/53	37	24 j6	50	8	7	27	M8
100	2	all	366	306	433	91	173	38	44	28 j6	60	8	7	31	M10
	4	all	366	306	433	134	173	41	44	28 j6	60	8	7	31	M10

1) Clearance hole for screw
2) Maximum dimension
3) Centering holes in shaft extensions to DIN 332 part 2

SINGLE-PHASE FRAME SIZE 56 - 100 IM B3
AMM - AMME - AMD - AMDE SERIES

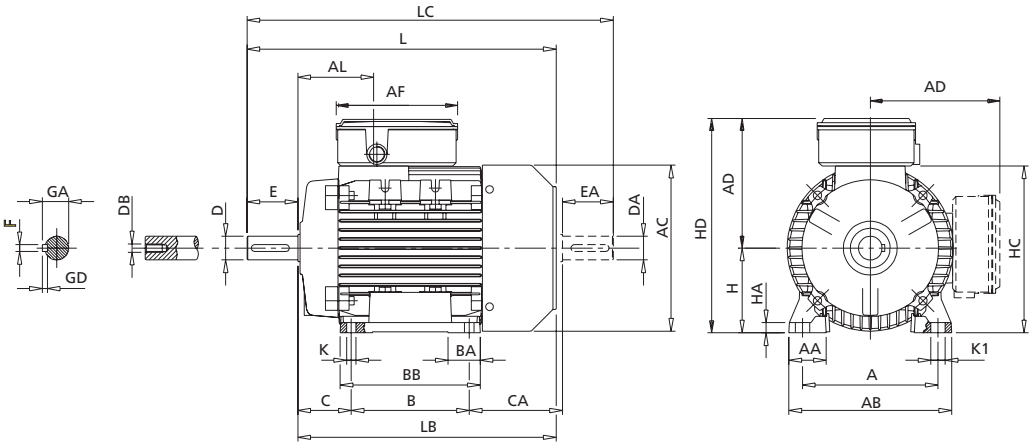

IEC	H	A	B	C	K [1]	AB	BB	CA	AD [2]	HD [2]	AC	HC	HA	K1
56	56	90	71	36	6	107	86	64	116	172	110	109	8	9
63	63	100	80	40	7	120	100	72	120	183	124	120	8	11
71	71	112	90	45	8	135	108	83	134	205	139	142	9	11
80	80	125	100	50	10	153	125	89	150	230	160	162	9.5	14
90S	90	140	100	56	10	170	150	116	160	250	180	181	11	15
90L	90	140	125	56	10	170	150	91	160	250	180	181	11	15
100	100	160	140	63	11	192	166	110	166	266	196	198	12	17

IEC	L	LB	LC	AL	AF	BA	AA	D/DA	E/EA	F/FA	GD	GA/GC	DB [3]
56	188	168	211	61	147	27	27	9 j6	20	3	3	10.2	M3
63	211	188	238	63	147	29	30	11 j6	23	4	4	12.5	M4
71	246	216	278	69	147	28	31	14 j6	30	5	5	16	M5
80	272	232	319	79	173	28.5	34.5	19 j6	40	6	6	21.5	M6
90S	317	267	372	85	173	28/53	37	24 j6	50	8	7	27	M8
90L	317	267	372	85	173	28/53	37	24 j6	50	8	7	27	M8
100	366	306	433	91	173	38	44	28 j6	60	8	7	31	M10

1) Clearance hole for screw
2) Maximum dimension
3) Centering holes in shaft extensions to DIN 332 part 2

SINGLE-PHASE FRAME SIZE 56 - 100 IM B5, IM B14
AMMHE - AMMEHE - AMM - AMME - AMD - AMDE SERIES

IM B14

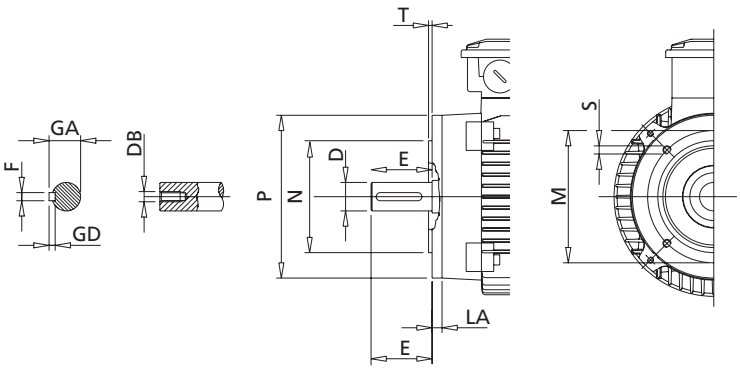

IM B5

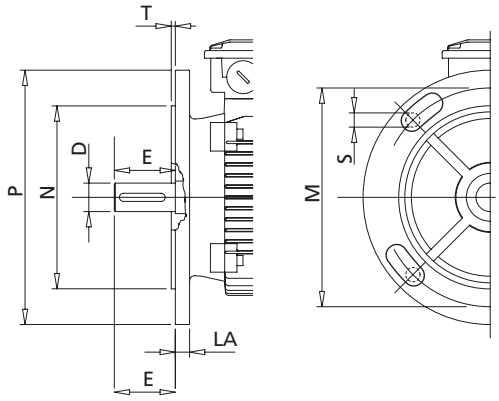

	SMALL FLANGE B14						LARGE FLANGE B14[1]						FLANGE B5					
IEC	P	N	LA	M	T	S	P	N	LA	M	T	S	M	N	P	T	LA	S
56	80	50	8	65	2.5	M5	105	70	8	85	2.5	M6	100	80	120	2.5	7	7
63	90	60	8	75	2.5	M5	120	80	8	100	2.5	M6	115	95	140	3	8	M8
71	105	70	8	85	2.5	M6	140	95	8	115	3	M8	130	110	160	3.5	10	M8
80	120	80	9	100	3	M6	160	110	8.5	130	3.5	M8	165	130	200	3.5	10	M10
90S-L	140	95	9	115	3	M8	160	110	9	130	3.5	M8	165	130	200	3.5	12	M10
100	160	110	10	130	3.5	M8	200	130	12	165	3.5	M10	215	180	250	4	14	M12

1) Available on request. Refer to the "PL1.1 - optional features" price list.

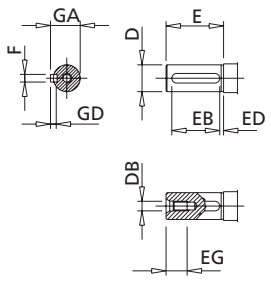

IEC	D	E	F h9	GD	GA	DB2)	EG	EB	ED
56	9 j6	20	3	3	10.2	M3	9	15	2.5
63	11 j6	23	4	4	12.5	M4	10	15	4
71	14 j6	30	5	5	16	M5	12.5	20	4
80	19 j6	40	6	6	21.5	M6	16	30	4
90S-L	24 j6	50	8	7	27	M8	19	40	4
100	28 j6	60	8	7	31	M10	22	50	4
112	28 j6	60	8	7	31	M10	22	50	4
132S-M	38 k6	80	10	8	41	M12	28	70	4
160M-L	42 k6	110	12	8	45	M16	36	100	4

1) Centering holes in shaft extensions to DIN 332 part 2

BRAKE MOTORS

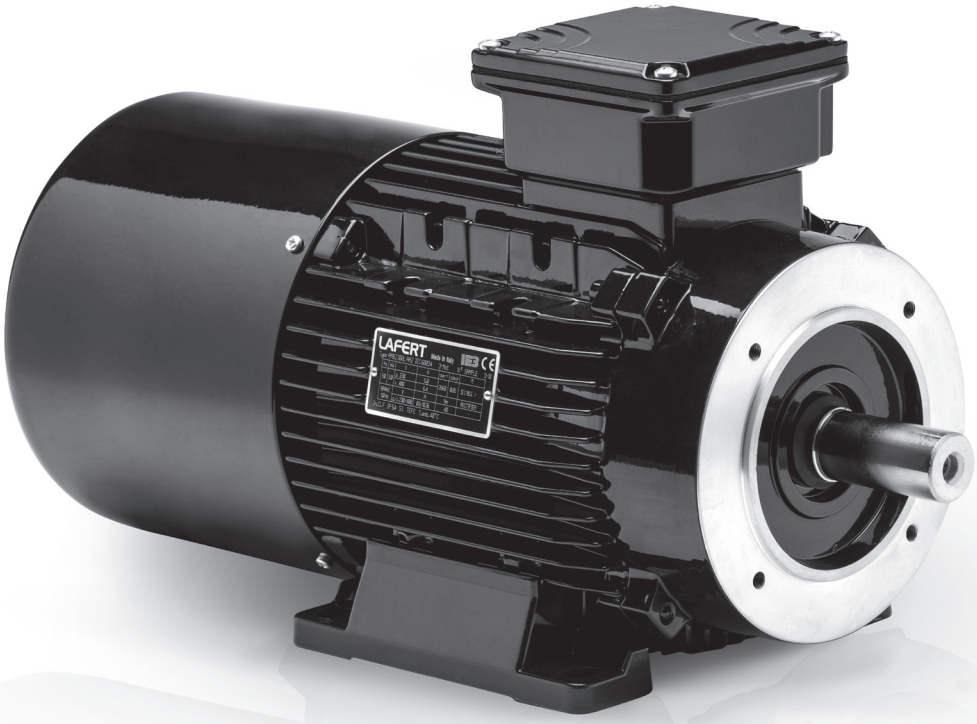

THREE-PHASE BRAKE MOTOR WITH HIGH-TORQUE D.C. BRAKE

Frame sizes: 63 ... 160
Output range: 0.12 ... 22kW
Polarity: 2, 4, 6, 8 (pole-changing on request)
Insulation class F
Standard degree of protection: IP 54 (IP 55 on request)
Double braking surface
Asbestos-free friction surfaces
Electromagnetic spring-loaded brake with release in case of power supply interruption
Standard rectifier supply: 230 V - 50/60 Hz (others on request)
Progressive and noiseless braking
High braking torque (M_b >1,5 M_N)
Step adjustment braking torque (~ 33%; 67%;100% $M_{b\ max}$)
Fast acting rectifier available on request only for rectifier supply 230V 50/60Hz (sizes 63 ...112)
Special execution for wind generator available on request (continuous braking torque adjustment in the range 30% $M_{b\ max}$ … 100% $M_{b\ max}$), antisticking execution, corrosion resistance execution, reduced braking torque value, reduced range braking torque regulation, …)
cURus approval on request
Efficiency class conform to Energy cURus on request
Available with a large number of options (i.e. encoder, axial independent cooling fan, hand release lever, special brake designs, flywheel, …)
High number of starts/hour

Typical applications:
Automation requiring a smooth intervention, transfer machinery, packaging machinery, gearmotors.

TABLE OF THE MAIN BRAKE FEATURES

Brake size	Motor size	M_b 1) [Nm] braking spring number 2	3	4	6	9	Air gap [mm]	Brake absorption [A] on dc side @ rectifier input 230V 50/60Hz
12 MV	63	1.8		3.5			0.25 ...0.5	0.1 A
12 MV	71	1.8		3.5			0.25 ...0.5	0.1 A
53 MV		2.5		5	7.5		0.25 ...0.5	0.14 A
13 MV	80	2.5		5	7.5		0.25 ...0.5	0.14 A
04 MV		5		10	15		0.3 ...0.55	0.17 A
14 MV	90	5		10	15		0.3 ...0.55	0.17 A
05 MV		13		26	40		0.3 ...0.55	0.23 A
15 MV	100	13		26	40		0.3 ...0.55	0.23 A
56S MV		25		50	75		0.35 ...0.6	0.34 A
15 MV	112	13		26	40		0.3 ...0.55	0.23 A
56S MV		25		50	75		0.35 ...0.6	0.34 A
16S MV	132	25		50	75		0.35 ...0.6	0.54 A
07 MV		50		100	150		0.4 ...0.8	0.7 A
17 MV	160	50		100	150		0.4 ...0.8	0.7 A
08 MV			85		170	250	0.5 ...0.9	1.2 A

1) Rated values ± 20%
For delays of release/braking consult us
For max friction work for each braking consult us

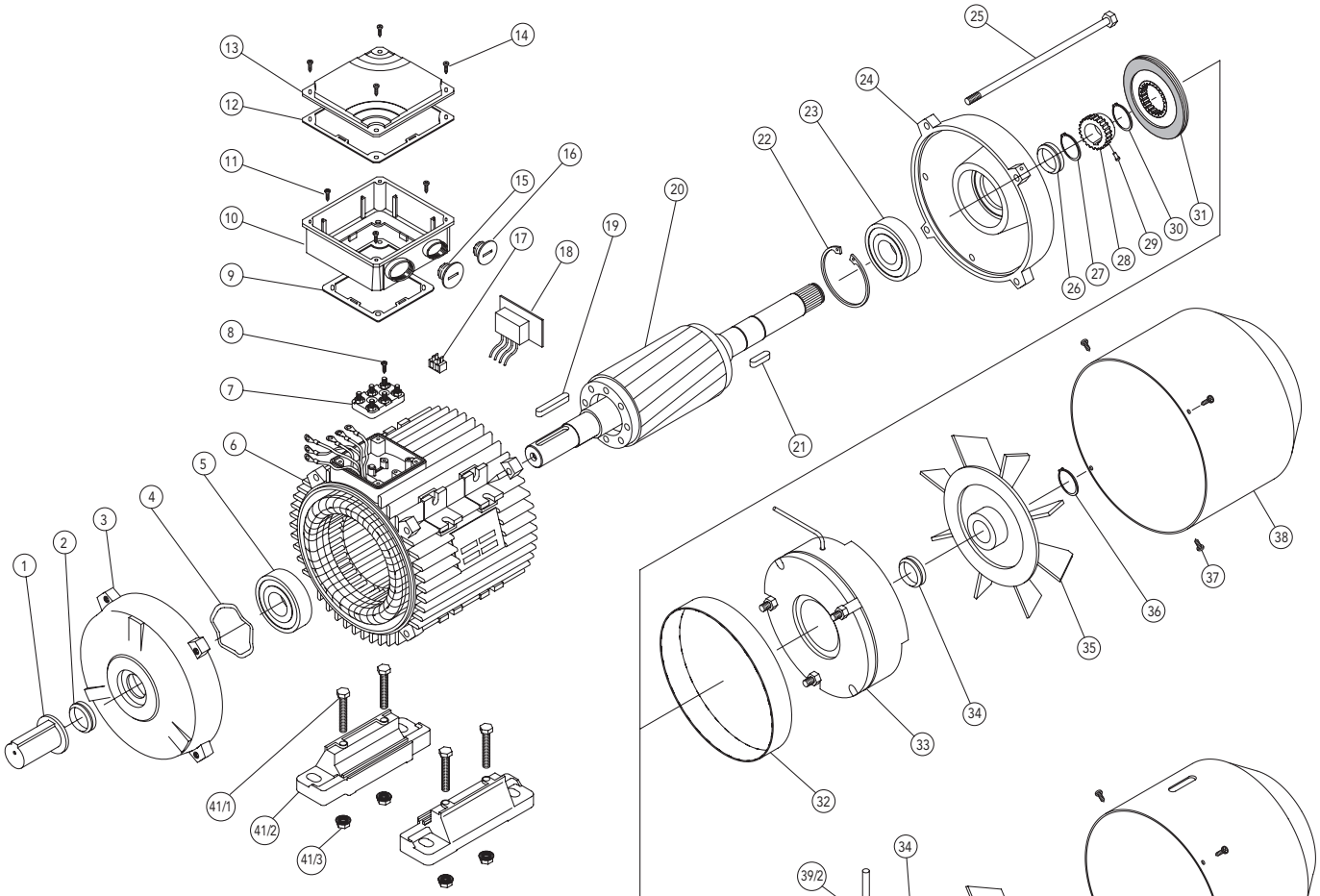

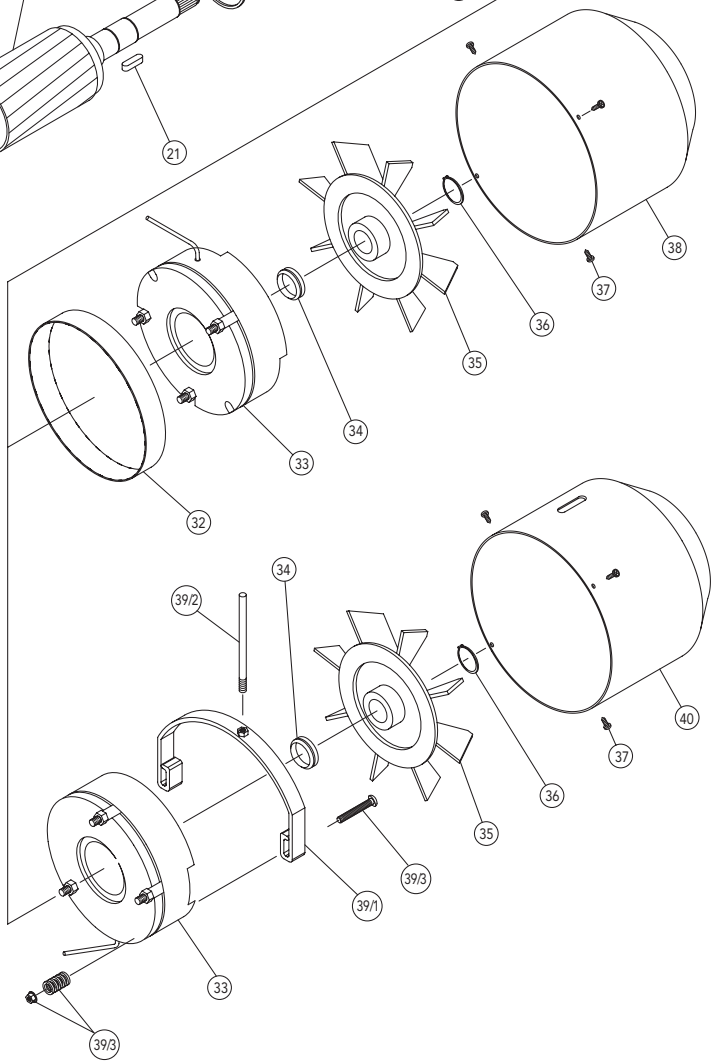

PART DESCRIPTION

1 Shaft protection
2 Dust seal drive end
3 Endshield drive end
4 Pre-load washer
5 Bearing drive end
6 Stator frame
7 Motor terminal board
8 Fixing screw motor terminal board
9 Gasket terminal box
10 Terminal box
11 Fixing screw terminal box
12 Gasket terminal box lid
13 Terminal box lid
14 Fixing screw terminal box lid
15 Blank gland plug
16 Blank gland plug
17 Brake terminal board (for sizes 63 … 112[a])
18 Rectifier
19 Motor key
20 Rotor complete
21 Brake key
22 Circlip
23 Bearing non-drive end
24 Endshield non-drive end[b]
25 Tie rod
26 Dust seal (for IP55 only)
27 Circlip
28 Brake hub
29 Anti-vibration spring/O-ring
30 Circlip
31 Brake disk
32 Brake gasket (for IP55 only)
33 Preassembled part of the brake (electromagnet, brake anchor, braking springs, fixing screws, guiding pipes, fastening nuts)
34 Dust seal (for IP55 only)
35 Fan
36 Circlip (only for sizes 100 and 112)
37 Fixing screw fan cover
38 Fan cover
39 Hand release:
39/1 hand lever
39/2 releasing lever
39/3 regulation/fixing kit
40 Fan cover for hand release
41 Foot kit (1 foot):
41/1 fixing screw
41/2 foot
41/3 fixing nut[c]

a) for sizes >112 brake terminal board is on the rectifier
b) for sizes 63 and 71 with braking flange
c) for sizes 132-160 washer and nut

THREE-PHASE BRAKE MOTOR WITH HIGH-TORQUE A.C. BRAKE

Frame sizes: 63 ... 160
Output range: 0.12 ... 22kW
Polarity: 2, 4, 6, 8 (pole-changing on request)
Insulation class F
Standard degree of protection: IP 54 (IP 55 on request)
Double braking surface
Asbestos-free friction surfaces
Electromagnetic spring-loaded brake with release in case of power supply interruption
Standard brake supply: 230/400V - 50Hz (others on request) with separate terminal block
High braking torque ($M_b > 1.5\ M_N$)
Step adjustment braking torque as standard according to table below (< 33%; 67%;100% $M_{b\ max}$)
Special execution for wind generator available on request (continuous braking torque adjustment (in the range 30% $M_{b\ max}$ … 100% $M_{b\ max}$), antisticking execution, corrosion resistance execution, reduced braking torque value, reduced range braking torque regulation, …)
cURus approval on request
Efficiency class conform to Energy cURus on request
Available with a large number of options (i.e. encoder, axial independent cooling fan, hand release lever, special brake designs, flywheel, …)
Very high number of starts/hour

Typical applications:
Automation with high intervention frequency, gearmotors, lifting, handling machinery.

TABLE OF THE MAIN BRAKE FEATURES

Brake size	Motor size	M_b [1] [Nm] min	average	max (std)	Air gap [mm]	Brake absorption [A] @ 230/400V
12 MS/MV	63	1.8		3.5	0.25 … 0.5	0.18/0.1
12 MS/MV	71	1.8		3.5	0.25 … 0.5	0.18/0.1
53 MS/MV		2.5	5	7.5	0.25 … 0.5	0.2/0.12
13 MS/MV	80	2.5	5	7.5	0.25 … 0.5	0.2/0.12
04 MS/MV		5	10	15	0.3 … 0.55	0.28/0.16
14 MS/MV	90	5	10	15	0.3 … 0.55	0.28/0.16
05 MS/MV		13	26	40	0.3 … 0.55	0.63/0.36
15 MS/MV	100	13	26	40	0.3 … 0.55	0.63/0.36
56S MS/MV		25	50	75	0.35 … 0.6	1.2/0.68
15 MS/MV	112	13	26	40	0.3 … 0.55	0.63/0.36
56S MS/MV		25	50	75	0.35 … 0.6	1.2/0.68
16S MS/MV	132	25	50	75	0.35 … 0.6	1.2/0.68
07 MS/MV		50	100	150	0.4 … 0.8	1.5/0.87
17 MS/MV	160	50	100	150	0.4 … 0.8	1.5/0.87
08 MS/MV		85	170	250	0.5 … 0.8	1.9/1.1

1) Rated values ± 20%
For delays of release/braking consult us
For max friction work for each braking consult us

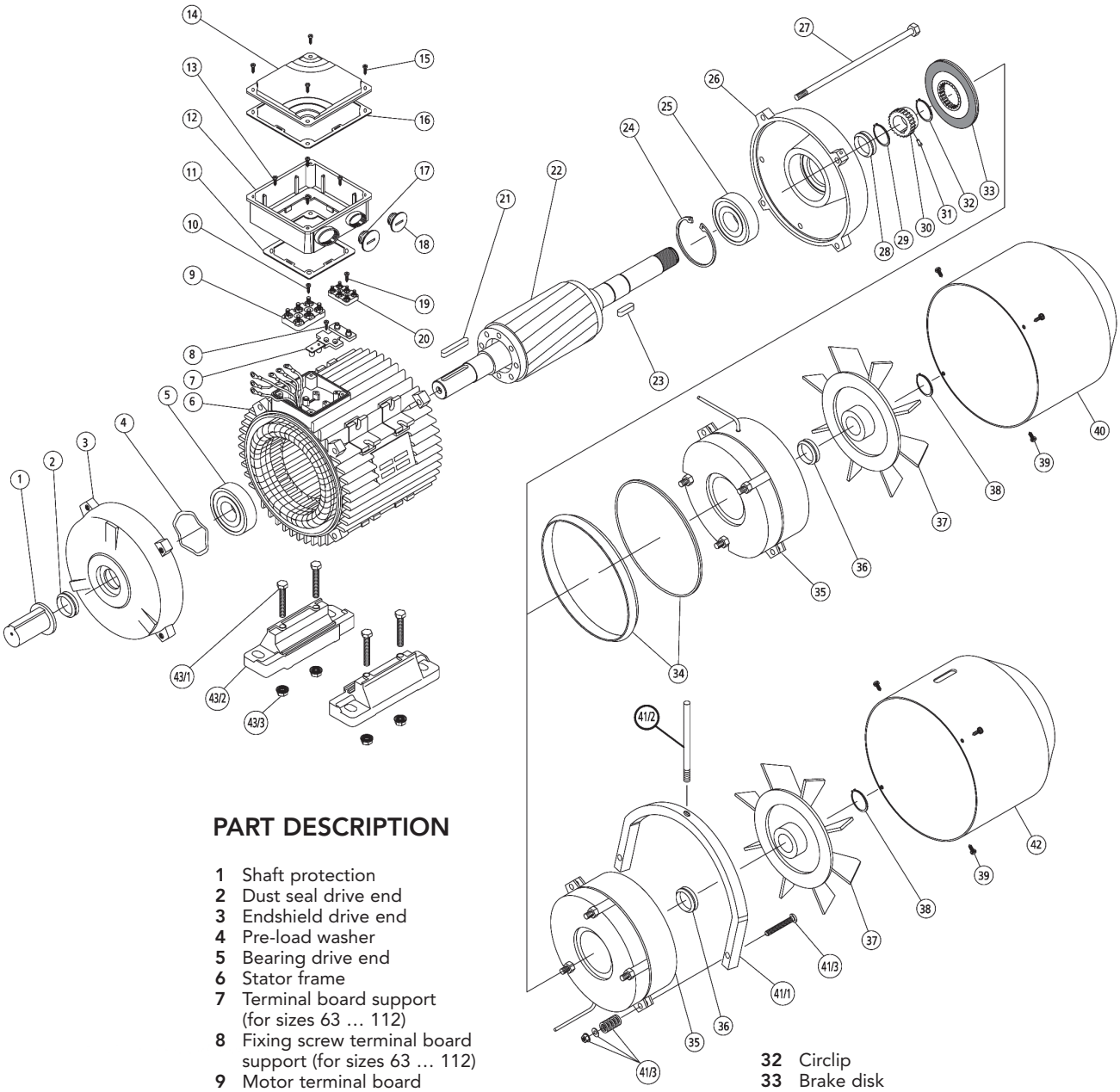

PART DESCRIPTION

1 Shaft protection
2 Dust seal drive end
3 Endshield drive end
4 Pre-load washer
5 Bearing drive end
6 Stator frame
7 Terminal board support (for sizes 63 … 112)
8 Fixing screw terminal board support (for sizes 63 … 112)
9 Motor terminal board
10 Fixing screw motor terminal board
11 Gasket terminal box
12 Terminal box
13 Fixing screw terminal box
14 Gasket terminal box lid
15 Terminal box lid
16 Fixing screw terminal box lid
17 Blank gland plug
18 Blank gland plug
19 Fixing screw brake terminal board (for sizes 63 … 112)
20 Brake terminal board (for sizes 63 … 112)
21 Motor key
22 Rotor complete
23 Brake key
24 Circlip
25 Bearing non-drive end
26 Endshield non-drive end[a)]
27 Tie rod
28 Dust seal (for IP55 only)
29 Circlip
30 Brake hub
31 Anti-vibration spring/O-ring
32 Circlip
33 Brake disk
34 Brake gasket (for IP55 only)
35 Preassembled part of the brake (electromagnet,brake anchor,braking springs, fixing screws, guiding pipes, fastening nuts, spacers)
36 Dust seal (for IP55 only)
37 Fan
38 Circlip (only for sizes 100 and 112)
39 Fixing screw fan cover
40 Fan cover
41 Hand release:
41/1 hand lever
41/2 releasing lever
41/3 regulation/fixing kit
42 fan cover for hand release
43 foot kit (1 foot):
43/1 fixing screw
43/2 foot
43/3 fixing nut[b)]

a) for sizes 63 and 71 with braking flange
b) for size ≥ 132 washer and nut

THREE-PHASE BRAKE MOTOR WITH LOW-TORQUE D.C. BRAKE WITH REDUCED OVERALL DIMENSIONS

Frame sizes: 63 … 160
Output range: 0.12 … 22 kW
Polarity: 2, 4, 6, 8 (pole changing on request)
Insulation class F
IP 54 as standard degree of protection (IP 55 on request)
Electromagnetic spring-loaded brake with release in case of power supply interruption
Standard rectifier supply: 230 V - 50/60 Hz (others on request)
Standard version for easy air gap adjustment (version for manual rotation of the shaft front N-end available on request for size 63 ... 132)
Single braking surface
Asbestos-free friction surfaces
Non adjustable braking torque ($M_b \leq M_N$)
Soft, progressive and noiseless braking
Very reduced overall dimensions (similar to standard motors series AM)
Increased braking torque (+50% of the catalogue value) available on request
Fast acting rectifier available on request only for rectifier supply 230V 50/60Hz
cURus Approval on request
Efficiency class conform to Energy cURus on request
Available with a large range of options (i.e. encoder, axial independent cooling fan, hand release lever, …)

Typical applications:
Woodworking/cutting machinery, machinery requiring long braking periods and high braking duties.

TABLE OF THE MAIN BRAKE FEATURES

Brake size	Motor size	M_b [1] [Nm]	Air gap [mm]	Brake absorption [A] on dc side @ rectifier input 200V 50/60Hz
63	63	3	0.25 …0.5	0.1 A
71	71	4	0.25 …0.5	0.1 A
80	80	7	0.25 …0.5	0.16 A
90	90	7	0.25 …0.5	0.16 A
100	100	13	0.3 …0.55	0.2 A
	112	13	0.3 …0.55	0.2 A
132 L	132	30	0.35 … 0.6	0.27 A
	160	30	0.35 …0.6	0.27 A

1) Rated values ± 20%
For delays of release/braking consult us
For max friction work for each braking consult us

SPARE PARTS FOR AMS MOTORS FOR EASY AIR GAP ADJUSTMENT [1)]

1) AMS for manual rotation of the shaft from NDE available on request

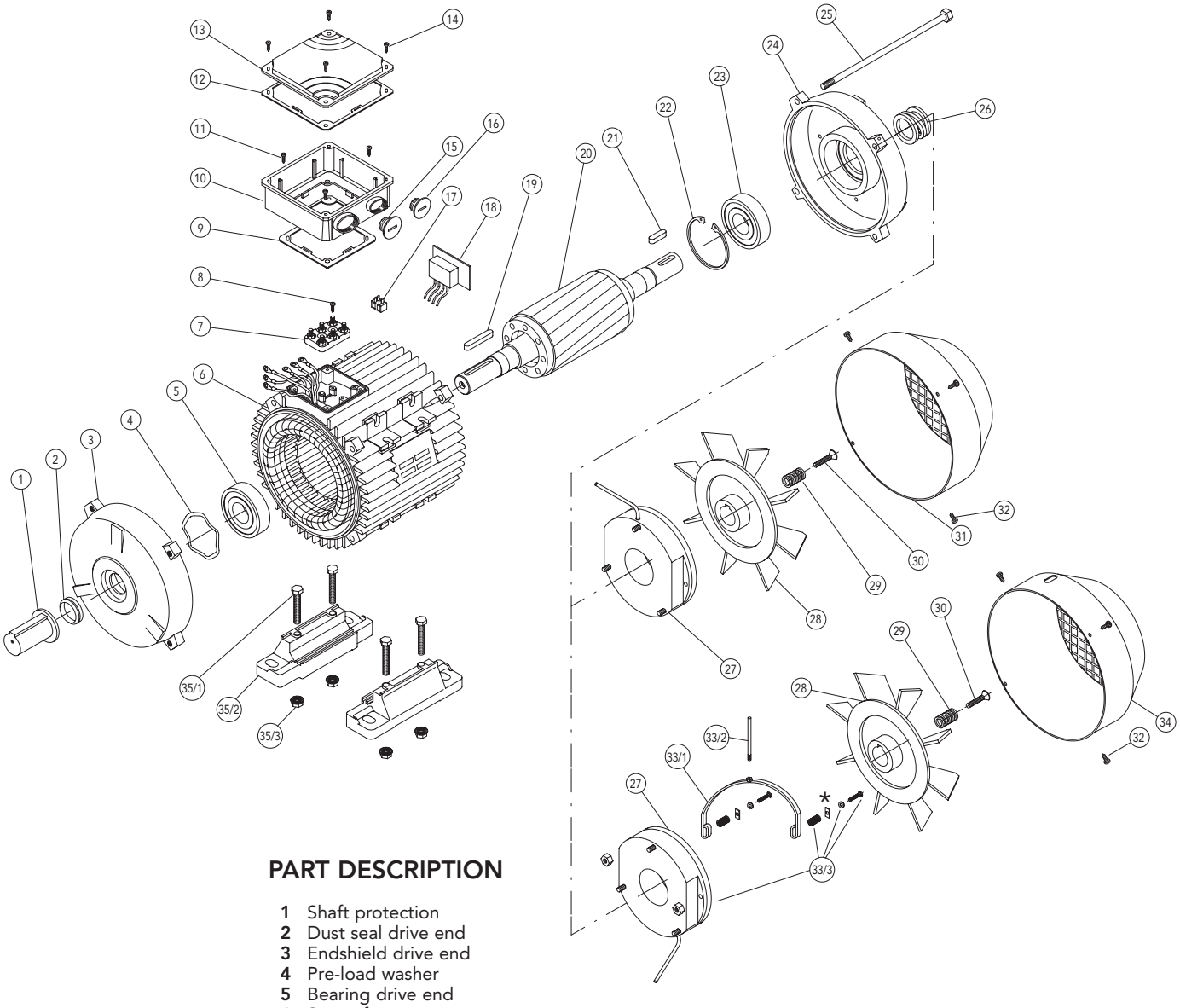

PART DESCRIPTION

1 Shaft protection
2 Dust seal drive end
3 Endshield drive end
4 Pre-load washer
5 Bearing drive end
6 Stator frame
7 Motor terminal board
8 Fixing screw motor terminal board
9 Gasket terminal box
10 Terminal box
11 Fixing screw terminal box
12 Gasket terminal box lid
13 Terminal box lid
14 Fixing screw terminal box lid
15 Blank gland plug
16 Blank gland plug
17 Brake terminal board
18 Rectifier
19 Motor key
20 Rotor complete
21 Brake key
22 Circlip
23 Bearing non-drive end
24 Endshield non-drive end
25 Tie rod
26 Main contrast spring
27 Preassembled part of the brake (electromagnet, brake anchor with friction surface, braking springs, fixing screws)
28 Brake fan (with fixed washer)
29 Auxiliary contrast spring
30 Air gap adjustment/fixing screw
31 Fan cover
32 Fixing screw fan cover
33 Hand release:
33/1 hand lever
33/2 releasing lever
33/3 regulation/fixing kit
34 Fan cover for hand release
35 Foot kit (1 foot) (for sizes 71 … 132[a)])
35/1 fixing screw
35/2 foot
35/3 fixing nut[b)]

a) for size 63 feet integral with the case
b) for size 132 washer and nut

CONNECTION DIAGRAMS

Every brake motors has got, inside the terminal box, the connection diagram both for the motor and for the brake/rectifier.

For brake motors with ac brakes (**AMBZ series**) the connection diagram is

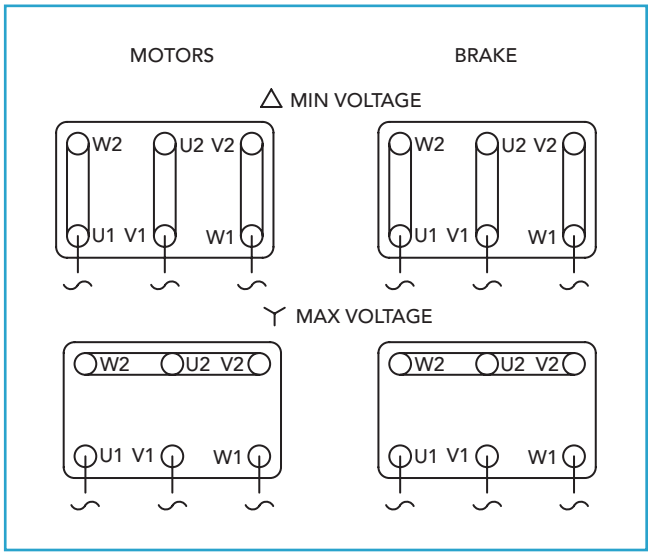

CONNECTION DIAGRAMS

For brake motors with dc brake (**AMS and AMBY series**) required at 230/400V 50Hz, the rectifier is directly connected to the motor terminal block as follows

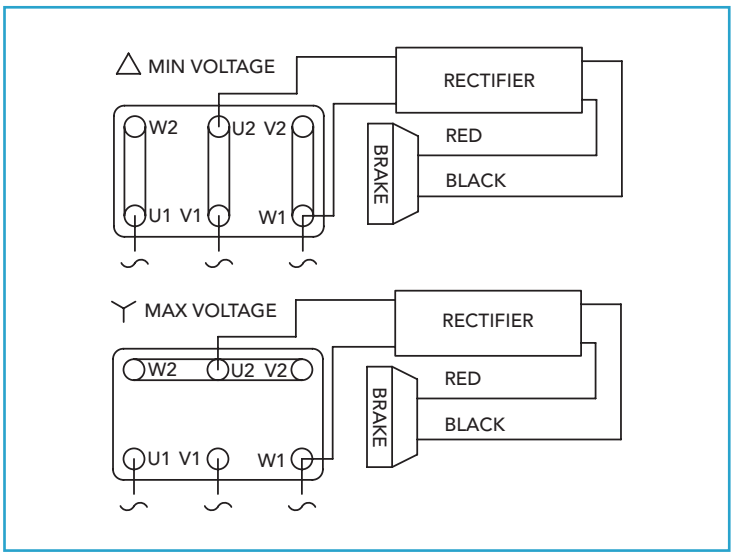

For AMS (63 ... 160) and AMBY (63 ...112)

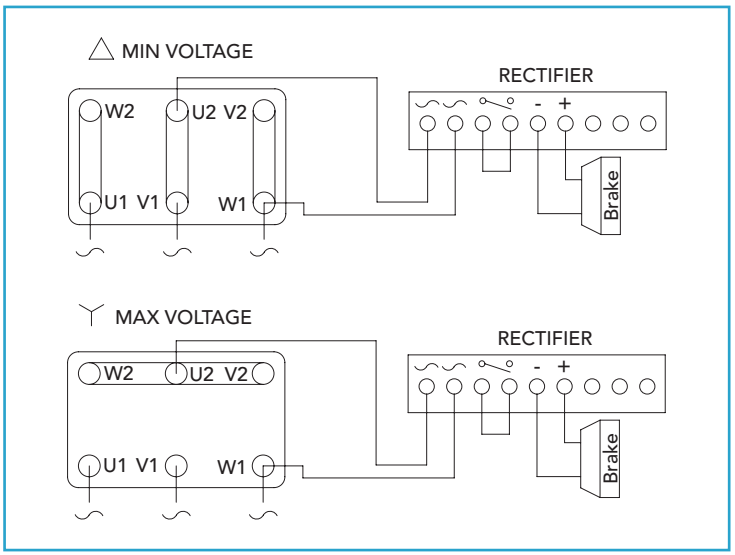

For AMBY 132-160

CONNECTION DIAGRAMS

For all other supply value, different from 230/400V 50Hz, since the standard rectifier supply is 230V 50/60Hz, and when an inverter supply is used the rectifier has to be separately supplied according to the diagrams

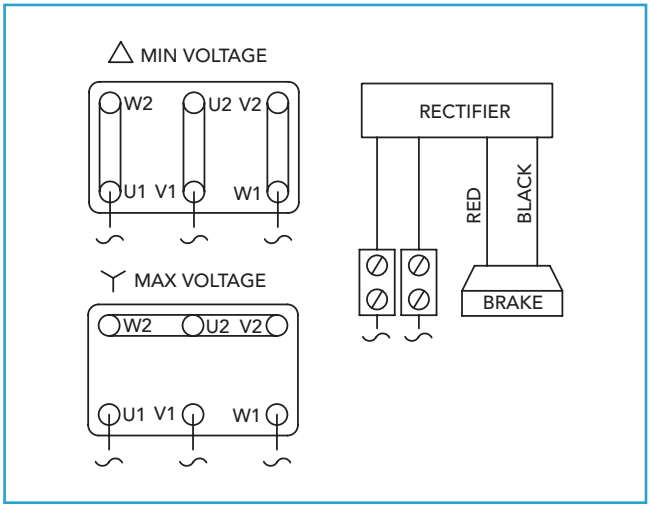

For AMS (63 ... 160) and AMBY (63 ...112)

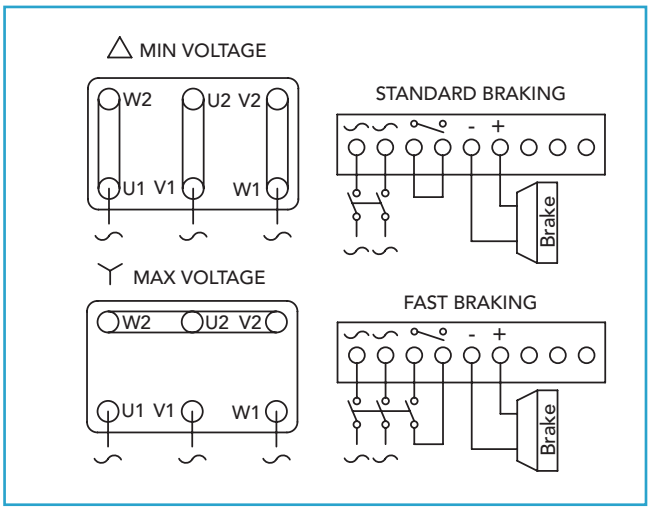

For AMBY 132-160

Supplying the rectifier separately from the motor terminal block allows to reduce the delay of braking; to achieve the fast braking on AMBY132-160 it is necessary to open even the dc side of the brake coil (according to previous figure).
In case of pole-changing brake motors: for motor connection see three phase motors section , the brake/rectifier has to be supplied separately.

Warning: for the correct supply of both motor and brake refer to the values written on nameplate.

TYPE DESIGNATION

Apart from other information, it is necessary to specify the exact type designation in all enquiries, when ordering spare parts or replacement motors or when asking for documentary information.

The type designation of our brake motors comprises 10 points of reference, each of which may consist of several letters and/or numerals. The meaning of each symbol can be seen from the following table. For motors not included in our standard range, special symbols may be used which are not listed here

Ref. point	Meaning	Description of symbols used for our motors	
1	Type of motor	A	Asynchronous motor
2	Cooling	M G[1)] MFV	Surface cooled with external fan, cooling fins Surface cooled without external fan, cooling fins Surface cooled with forced ventilation, cooling fins
3	Type of motor	blank HE PE	Three-phase motors, standard efficiency IE1 code Three-phase motors, high efficiency IE2 code Three-phase motors, premium efficiency IE3 code
4	Type of brake	BY BZ S	High-torque dc brake High-torque ac brake Low-torque dc brake
5	Shaft centre height	63, 71, 80, 90, 100, 112, 132,160	
6	Frame length	Z S M L	 Mechanical dimension (short) Mechanical dimension (medium) Mechanical dimension (long)
7	Mechanical design and output power	A ... ... Z	
8	Frame material	A	Aluminium frame
9	Number of poles	2 4 6 8	(pole-changing on request)
10	Special features	R3	High resistance rotor

1) For AMBY and AMBZ type only

Example

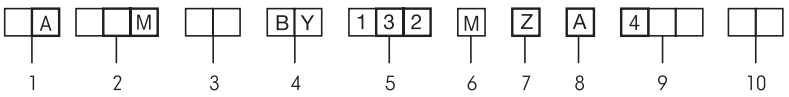

PREMIUM EFFICIENCY BRAKE MOTORS - IE3

EFFICIENCY LEVEL ACCORDING TO IEC 60034-30-1:2014
EFFICIENCY TESTING METHOD IEC 60034-2-1;2014

FOR MAINS VOLTAGE
400 V - 50 HZ

IE3

TEMPERATURE RISE TO CLASS B

Type		kW	HP	rpm	M_N Nm	IE3 η 50%	IE3 η 75%	IE3 η 100%	cos φ	I_N 400V	I_A/I_N	M_A/M_N	M_K/M_N
3000 rpm (2 poles)													
AMPE... 71Z AA	**2***	0.75	1	2880	2.5	76.5	80.8	80.7	0.70	1.9	5.5	3.1	3.2
AMPE... 80Z AA	**2**	0.75	1	2910	2.5	77.8	81.2	82.0	0.78	1.7	8.9	4.7	4.8
AMPE... 80Z BA	**2**	1.1	1.5	2870	3.7	78.7	81.7	82.7	0.76	2.4	9.3	5.0	5.3
AMPE... 80Z CA	**2***	1.5	2	2810	5.1	78.8	82.2	84.2	0.76	3.6	7.8	4.9	4.3
AMPE... 90S AA	**2**	1.5	2	2875	5.0	83.2	84.8	84.2	0.85	3.0	8.4	3.6	3.8
AMPE... 90L BA	**2**	2.2	3	2880	7.3	85.0	86.2	86.5	0.82	4.6	9.2	4.0	4.2
AMPE... 100L AA	**2**	3	4	2900	9.9	82.3	85.8	87.1	0.89	5.6	8.8	5.5	4.5
AMPE... 100L BA	**2***	4	5.5	2920	13.1	85.4	87.2	88.1	0.81	8.2	10.9	6.1	5.7
AMPE... 112M AA	**2**	4	5.5	2910	13.1	86.8	87.8	88.1	0.93	7.0	9.6	3.6	4.0
AMPE... 112M BA	**2***	5.5	7.5	2935	17.9	85.6	88.3	89.2	0.87	10.2	11.2	4.2	4.3
AMPE... 132S ZA	**2**	5.5	7.5	2920	18.0	88.0	88.5	89.2	0.9	10.0	8.9	3.0	3.6
AMPE... 132S TA	**2**	7.5	10	2910	24.6	88.6	89.2	90.1	0.92	13.1	8.9	3.0	3.6
AMPE... 132M ZA	**2***	9.2	12.5	2930	30.0	88.6	89.8	90.7	0.89	16.5	10.1	3.7	4.0
AMPE... 132M RA	**2***	11	15	2935	35.8	90.0	90.8	91.2	0.89	19.9	9.7	4.4	4.6
AMPE... 160M YA	**2**	11	15	2950	35.6	87.4	89.8	91.2	0.89	19.7	9.1	4.0	4.2
AMPE... 160M ZA	**2**	15	20	2940	48.7	91.0	91.3	91.9	0.89	26.7	9.7	4.7	4.8
AMPE... 160L ZA	**2**	18.5	25	2950	59.9	91.6	92.8	92.4	0.88	33.0	10.7	4.6	4.7
AMPE... 160L TA	**2***	22	30	2950	71.3	92.2	93.7	92.7	0.87	39.4	10.4	4.5	4.6

Type		kW	HP	rpm	M_N Nm	IE3 η 50%	IE3 η 75%	IE3 η 100%	cos φ	I_N 400V	I_A/I_N	M_A/M_N	M_K/M_N
1500 rpm (4 poles)													
AMPE... 80Z AA	**4**	0.75	1	1435	5.0	80.7	81.5	82.5	0.74	1.8	5.5	2.7	2.8
AMPE... 90S AA	**4**	1.1	1.5	1440	7.3	83.3	84.3	84.1	0.75	2.5	7.1	4.3	4.4
AMPE... 90L BA	**4**	1.5	2	1430	10.0	84.1	85.2	85.3	0.72	3.6	6.6	4.3	4.4
AMPE... 100L AA	**4**	2.2	3	1455	14.5	86.0	87.0	86.7	0.78	4.8	9.0	3.1	3.5
AMPE... 100L BA	**4**	3	4	1460	19.5	86.1	87.8	87.7	0.82	6.0	8.5	2.5	3.0
AMPE... 112M AA	**4**	4	5.5	1450	26.4	87.2	88.3	88.6	0.80	8.2	8.5	2.7	3.5
AMPE... 132S AA	**4**	5.5	7.5	1460	35.9	90.6	91.3	89.6	0.84	10.6	8.6	2.5	3.5
AMPE... 132M BA	**4**	7.5	10	1465	48.9	90.8	91.5	90.4	0.84	14.2	8.6	2.5	3.5
AMPE... 132M CA	**4**	9.2	13	1460	60.1	91.0	91.6	91.0	0.84	17.3	8.7	2.4	3.6
AMPE... 160M AA	**4**	11	15	1475	71.3	91.6	92.4	91.4	0.83	21.0	8.2	2.1	2.8
AMPE... 160L BA	**4**	15	20	1465	97.8	92.2	92.7	92.1	0.83	28.5	7.8	2.3	3.1
AMPE... 160L CA	**4**	18.5	25	1470	122.0	92.0	92.8	92.6	0.78	37.0	7.1	2.1	2.6
AMPE... 160L DA	**4**	22	30	1470	143.9	92.4	93.1	93.0	0.76	45.0	8.0	2.2	3.0

* Higher output (progressive motor)
For maximum friction work per stop consult us
Motors @ 460 V – 60 Hz available on request

PREMIUM EFFICIENCY BRAKE MOTORS – IE3

AMPEBY SERIES – HIGH TORQUE – DC BRAKE
AMPEBZ SERIES – HIGH TORQUE – AC BRAKE
AMPES SERIES – LOW TORQUE – DC BRAKE

IE3

Type	AMPEBY J 10^{-3} kgm²	AMPEBY $M_{b\,max}$ Nm	AMPEBY z_L [1] c/h	AMPEBY kg	AMPEBZ J 10^{-3} kgm²	AMPEBZ $M_{b\,max}$ Nm	AMPEBZ z_L [1] c/h	AMPEBZ kg	AMPES J 10^{-3} kgm²	AMPES M_b Nm	AMPES z_L [1] c/h	AMPES kg
3000 rpm (2 poles)												
AMPE... 71Z AA 2*	0.63	7.5	4500	10.3	0.63	7.5	5000	10	1.02	3	2360	9
AMPE... 80Z AA 2	1.02	7.5(15)[3]	2650	15.3	1.02	7.5(15)[3]	3000	15	1.91	7	1400	13.9
AMPE... 80Z BA 2	1.28	15	2500	17.5	1.28	15	2800	17.2	2.12	7	1300	16
AMPE... 80Z CA 2*	1.31	15	2650	16.2	1.31	15	3000	16.1	2.15	7	1400	13.9
AMPE... 90S AA 2	1.84	15(40)[2]	2500	22.0	1.84	15(40)[2]	2800	21.9	2.76	7	1250	19
AMPE... 90L BA 2	2.13	15(40)[2]	2400	25.6	2.13	15(40)[2]	2700	26.1	3.06	7	1120	21.7
AMPE... 100L AA 2	3.87	40(75)[2]	2060	32.2	3.87	40(75)[2]	2290	32.9	6.5	13	950	27.9
AMPE... 100L BA 2*	4.26	40(75)[2]	2000	34.5	4.26	40(75)[2]	2230	35.2	6.9	13	900	30.2
AMPE... 112M AA 2	7.2	40(75)[2]	950	42.9	7.2	40(75)[2]	1065	44	9.8	13	630	36
AMPE... 112M BA 2*	8.3	40(75)[2]	900	45.8	8.3	40(75)[2]	1000	46.5	10.9	13	600	38.3
AMPE... 132S ZA 2	13.1	75(150)[2]	670	61	13.1	75(150)[2]	750	62	17.0	30	480	52
AMPE... 132S TA 2	16.9	75(150)[2]	550	70	16.9	75(150)[2]	610	72	20.7	30	380	62
AMPE... 132M ZA 2	18.7	75(150)[2]	500	77	18.5	75(150)[2]	555	78	-[3]	-[3]	-[3]	-[3]
AMPE... 132M RA 2*	20.6	75(150)[2]	500	77	20.6	75(150)[2]	555	78	-[3]	-[3]	-[3]	-[3]
AMPE... 160M YA 2	46.1	150(250)[2]	350	121	46.1	150(250)[2]	385	123	48.1	30	315	87
AMPE... 160M ZA 2	59	150(250)[2]	335	135	59	150(250)[2]	370	137	62	30	280	118
AMPE... 160L ZA 2	59	150(250)[2]	335	135	59	150(250)[2]	370	137	62	30	280	118
AMPE... 160L TA 2*	59	150(250)[2]	335	135	59	150(250)[2]	370	137	62	30	280	118

Type	AMPEBY J 10^{-3} kgm²	AMPEBY $M_{b\,max}$ Nm	AMPEBY z_L [1] c/h	AMPEBY kg	AMPEBZ J 10^{-3} kgm²	AMPEBZ $M_{b\,max}$ Nm	AMPEBZ z_L [1] c/h	AMPEBZ kg	AMPES J 10^{-3} kgm²	AMPES M_b Nm	AMPES z_L [1] c/h	AMPES kg
1500 rpm (4 poles)												
AMPE... 80Z AA 4	2.63	15	5800	15.7	2.63	15	5800	15.7	3.5	7	3500	14.3
AMPE... 90S AA 4	3.5	15(40)[2]	4650	20.5	3.5	15(40)[2]	5250	20.4	4.43	7	3250	17.5
AMPE... 90L BA 4	3.98	40	4150	24.8	3.98	40	4700	25.5	4.71	7	3000	20
AMPE... 100L AA 4	6.08	40(75)[2]	4250	31.1	6.08	40(75)[2]	4800	31.8	8.7	13	2350	26.8
AMPE... 100L BA 4	7.24	40(75)[2]	4050	33.6	7.24	40(75)[2]	4550	34.3	9.3	13	2000	29.3
AMPE... 112M AA 4	13.01	75	2370	44.7	13.01	75	2650	46.1	15.1	13	1410	36.5
AMPE... 132S AA 4	22.0	75(150)[2]	2000	60	22.0	75(150)[2]	2250	61	25.9	30	1180	51
AMPE... 132M BA 4	28.7	75(150)[2]	1800	69	28.7	75(150)[2]	2000	70	32.6	30	1000	60
AMPE... 132M CA 4	33.41	75(150)[2]	1500	87	33.41	75(150)[2]	1690	89	35.9	30	800	74
AMPE... 160M AA 4	69	150(250)[2]	670	115	69	150(250)[2]	750	118	71	30	560	98
AMPE... 160L BA 4	90	150(250)[2]	600	133	90	150(250)[2]	675	136	92	30	500	117
AMPE... 160L CA 4	108	250	580	157	108	250	650	156	105	30	480	126
AMPE... 160L DA 4	120	250	550	168	120	250	600	168	-[3]	-[3]	-[3]	-[3]

* Higher output (progressive motor)

1) Max. Number of no-load starts/hour with cyclic duration factor 50%
2) On request
3) Motor not available

HIGH EFFICIENCY BRAKE MOTORS – IE2

EFFICIENCY LEVEL ACCORDING TO IEC 60034-30-1:2014
EFFICIENCY TESTING METHOD IEC 60034-2-1;2014

FOR MAINS VOLTAGE
400 V - 50 HZ

IE2

TEMPERATURE RISE TO CLASS B

Type		kW	HP	rpm	M_N Nm	IE2 η 50%	IE2 η 75%	IE2 η 100%	cos φ	I_N 400V	I_A/I_N	M_A/M_N	M_K/M_N
3000 rpm (2 poles)													
AMHE ... 63Z AA	**2**	0.18	0.25	2720	0.6	53.8	59.7	60.4	0.76	0.6	3.7	3.0	3.1
AMHE ... 63Z BA	**2**	0.25	0.33	2790	0.9	60.8	67.2	64.8	0.68	0.8	4.5	3.2	3.3
AMHE ... 63Z CA	**2***	0.37	0.5	2750	1.3	59.1	66.2	69.5	0.69	1.1	4.6	3.4	3.4
AMHE ... 71Z XA	**2**	0.37	0.5	2810	1.3	67.5	71.6	69.5	0.77	1.0	4.7	3.6	3.6
AMHE ... 71Z YA	**2**	0.55	0.75	2780	1.9	72.9	76.7	74.1	0.80	1.3	4.8	3.2	3.3
AMHE ... 71Z AA	**2***	0.75	1	2865	2.5	75.0	78.1	79.4	0.71	1.9	5.2	3.1	3.1
AMHE ... 80Z AA	**2**	0.75	1	2900	2.5	77.3	78.5	80.5	0.78	1.7	7.0	3.6	3.6
AMHE ... 80Z BA	**2**	1.1	1.5	2880	3.6	79.5	81.2	81.5	0.78	2.5	6.8	3.6	3.6
AMHE ... 80Z CA	**2***	1.5	2	2880	5.0	80.5	82.1	82.4	0.78	3.4	7.0	3.5	3.6
AMHE ... 90S AA	**2**	1.5	2	2880	5.0	81.0	82.8	82.8	0.80	3.2	8.1	3.6	4.0
AMHE ... 90L CA	**2**	2.2	3	2860	7.3	82.5	84.0	84.0	0.85	4.4	8.5	3.5	3.7
AMHE ... 100L AA	**2**	3	4	2920	9.8	84.1	85.8	85.5	0.84	5.9	8.0	3.5	4.0
AMHE ... 100L BA	**2***	4	5.5	2920	13.1	85.2	86.4	86.1	0.86	7.8	8.2	3.3	3.8
AMHE ... 112M AA	**2**	4	5.5	2940	13.0	85.5	87.0	86.8	0.88	7.6	8.0	2.9	3.3
AMHE ... 112M BA	**2***	5.5	7.5	2920	18.0	85.8	87.4	87.3	0.88	10.4	8.0	3.0	3.2
AMHE ... 132S YA	**2**	5.5	7.5	2900	18.1	86.0	88.0	87.9	0.89	10.2	7.3	2.7	3.2
AMHE ... 132S ZA	**2**	7.5	10	2900	24.7	86.3	88.6	88.4	0.89	13.8	7.5	2.8	3.3
AMHE ... 132M ZA	**2***	9.2	12.5	2920	30.1	88.4	89.9	90.0	0.87	16.9	8.8	3.2	3.8
AMHE ... 132M RA	**2***	11	15	2920	36.0	88.1	90.0	89.7	0.90	19.8	7.5	2.8	3.4
AMHE ... 160M YA	**2**	11	15	2930	35.9	88.9	90.2	90.0	0.87	20.4	7.3	2.4	3.1
AMHE ... 160M ZA	**2**	15	20	2930	48.9	90.0	91.0	90.8	0.88	27.2	7.6	2.5	3.1
AMHE ... 160L ZA	**2**	18.5	25	2935	60.2	90.3	91.6	91.2	0.88	33.3	7.9	2.8	3.4
AMHE ... 160L TA	**2***	22	30	2935	71.6	91.0	91.7	91.5	0.90	38.6	8.3	3.0	3.7

* Higher output (progressive motor)

For maximum friction work per stop consult us
Motors @ 460 V - 60 Hz, available on request

HIGH EFFICIENCY BRAKE MOTORS – IE2

AMHEBY SERIES – HIGH TORQUE - DC BRAKE

AMHEBZ SERIES – HIGH TORQUE - AC BRAKE

AMHES SERIES – LOW TORQUE - DC BRAKE

IE2

Type		AMHEBY				AMHEBZ				AMHES			
		J 10^{-3} kgm^2	$M_{b\,max}$ Nm	z_L [1] c/h	kg	J 10^{-3} kgm^2	$M_{b\,max}$ Nm	z_L [1] c/h	kg	J 10^{-3} kgm^2	M_b Nm	z_L [1] c/h	kg
3000 rpm (2 poles)													
AMHE... 63Z AA	**2**	0.19	3.5	6300	5.7	0.19	3.5	7100	5.5	0.43	3	3550	5.1
AMHE... 63Z BA	**2**	0.21	3.5	6300	6.2	0.21	3.5	7100	6.0	0.45	3	3150	5.6
AMHE... 63Z CA	**2***	0.24	3.5	6000	6.5	0.24	3.5	6700	6.3	0.48	3	3150	5.9
AMHE... 71Z XA	**2**	0.38	3.5(7.5)[2]	5000	8.2	0.38	3.5(7.5)[2]	5600	8.0	0.81	4	2650	7.6
AMHE... 71Z YA	**2**	0.48	7.5	4750	9.3	0.48	7.5	5300	9.0	0.87	4	2650	8.0
AMHE... 71Z AA	**2***	0.63	7.5	5000	10	0.63	7.5	4500	10.3	1.02	3	2360	9.0
AMHE... 80Z AA	**2**	1.02	7.5(15)[3]	3000	15	1.02	7.5(15)[3]	2650	15.3	1.91	7	1400	13.9
AMHE... 80Z BA	**2**	1.28	15	2800	17.2	1.28	15	2500	17.5	2.12	7	1300	16
AMHE... 80Z CA	**2***	1.31	15	3000	16.1	1.31	15	2650	16.2	2.15	7	1400	13.9
AMHE... 90S AA	**2**	1.84	15(40)[2]	2800	21.9	1.84	15(40)[2]	2500	22	2.76	7	1250	19
AMHE... 90L CA	**2**	2.13	15(40)2)	2700	26.1	2.13	15(40)[2]	2400	25.6	3.06	7	1120	21.7
AMHE... 100L AA	**2**	3.87	40(75)[2]	2290	32.9	3.87	40(75)[2]	2060	32.2	6.5	13	950	27.9
AMHE... 100L BA	**2***	4.26	40(75)[2]	2230	35.2	4.26	40(75)[2]	2000	34.5	6.9	13	900	30.2
AMHE... 112M AA	**2**	7.2	40(75)[2]	1065	44	7.2	40(75)[2]	950	42.9	9.8	13	630	36
AMHE... 112M BA	**2***	8.3	40(75)[2]	1000	46.5	8.3	40(75)[2]	900	45.8	10.9	13	600	38.3
AMHE... 132S ZA	**2**	13.1	75(150)[2]	750	62	13.1	75(150)[2]	670	61	17	30	480	52
AMHE... 132S TA	**2**	16.9	75(150)[2]	610	72	16.9	75(150)[2]	550	70	20.7	30	380	62
AMHE... 132M ZA	**2***	18.5	75(150)[2]	555	78	18.7	75(150)[2]	500	77	- [3]	- [3]	- [3]	- [3]
AMHE... 132M RA	**2***	20.6	75(150)[2]	555	78	20.6	75(150)[2]	500	77	- [3]	- [3]	- [3]	- [3]
AMHE... 160M YA	**2**	46.1	150(250)[2]	385	123	46.1	150(250)[2]	350	121	48.1	30	315	87
AMHE... 160M ZA	**2**	59	150(250)[2]	370	137	59	150(250)[2]	335	135	62	30	280	118
AMHE... 160L ZA	**2**	59	150(250)[2]	370	137	59	150(250)[2]	335	135	62	30	280	118
AMHE... 160L TA	**2***	59	150(250)[2]	370	137	59	150(250)[2]	335	135	62	30	280	118

* Higher output (progressive motor)

1) Max. Number of no-load starts/hour with cyclic duration factor 50%
2) On request
3) Motor not available

EFFICIENCY LEVEL ACCORDING TO IEC 60034-30-1:2014
EFFICIENCY TESTING METHOD IEC 60034-2-1;2014

FOR MAINS VOLTAGE
400 V - 50 HZ

IE2

TEMPERATURE RISE TO CLASS B

Type		kW	HP	rpm	M_N Nm	IE2 η 50%	IE2 η 75%	IE2 η 100%	cos φ	I_N 400V	I_A/I_N	M_A/M_N	M_K/M_N
1500 rpm (4 poles)													
AMHE ... 63Z AA	**4**	0.12	0.16	1330	0.8	61.3	62.6	59.1	0.67	0.45	2.4	2.0	2
AMHE ... 63Z BA	**4**	0.18	0.25	1345	1.3	61.9	66.7	64.7	0.66	0.6	2.3	1.9	1.9
AMHE ... 63Z CA	**4***	0.25	0.33	1356	1.8	67.3	71.3	68.5	0.65	0.9	2.7	2.2	2.1
AMHE ... 71Z AA	**4**	0.25	0.33	1390	1.8	67.0	71.2	68.5	0.77	0.7	3.2	1.9	2
AMHE ... 71Z BA	**4**	0.37	0.5	1410	2.6	68.4	73.3	72.7	0.70	1.0	3.3	2.2	2.2
AMHE ... 71Z CA	**4***	0.55	0.75[1]	1410	3.8	71.5	75.5	77.1	0.71	1.5	3.6	2.4	2.4
AMHE ... 80Z XA	**4**	0.55	0.75	1422	3.8	75.1	77.8	77.1	0.72	1.5	3.6	2.6	2.6
AMHE ... 80Z AA	**4**	0.75	1	1430	5.0	79.2	80.3	80.2	0.76	1.8	5.5	2.8	3.0
AMHE ... 90S AA	**4**	1.1	1.5	1430	7.3	81.4	82.7	82.5	0.77	2.5	6.1	4.0	4.1
AMHE ... 90L BA	**4**	1.5	2	1430	10.0	82.0	83.5	83.0	0.77	3.4	6.4	3.9	4.0
AMHE ... 100L AA	**4**	2.2	3	1450	14.5	84.0	85.3	85.1	0.74	5.1	6.0	3.2	3.4
AMHE ... 100L BA	**4**	3	4	1440	19.9	85.3	86.6	86.4	0.77	6.5	6.3	3.4	3.6
AMHE ... 112M AA	**4**	4	5.5	1450	26.3	86.0	87.3	87.1	0.78	8.5	6.1	3.1	3.3
AMHE ... 132S AA	**4**	5.5	7.5	1455	36.1	89.0	89.6	87.7	0.83	10.9	8.5	2.6	3.7
AMHE ... 132M BA	**4**	7.5	10	1460	49.1	90.0	90.5	88.7	0.83	14.6	8.2	2.6	3.7
AMHE ... 132M CA	**4**	9.2	12.5	1460	60.3	90.2	90.6	89.3	0.83	18.0	8.2	2.6	3.7
AMHE ... 160M AA	**4**	11	15	1470	71	91.4	92.0	91.3	0.81	22.0	8.2	2.1	2.8
AMHE ... 160L BA	**4**	15	20	1460	98	92.0	92.3	91.7	0.82	29.0	8.2	2.1	2.8
AMHE ... 160L CA	**4**	18.5	25	1460	122	92.4	92.5	91.8	0.83	35.2	8.2	2.1	2.8
AMHE ... 160L DA	**4**	22	30	1460	144	92.4	92.5	91.9	0.80	43.5	8.3	2.2	3.0

* Higher output (progressive motor)

For maximum friction work per stop consult us
Motors @ 460 V - 60 Hz available on request

AMHEBY SERIES – HIGH TORQUE - DC BRAKE

AMHEBZ SERIES – HIGH TORQUE - AC BRAKE

AMHES SERIES – LOW TORQUE - DC BRAKE

IE2

Type		AMHEBY				AMHEBZ				AMHES			
		J 10^{-3} kgm^2	$M_{b\,max}$ Nm	z_L [1] c/h	kg	J 10^{-3} kgm^2	$M_{b\,max}$ Nm	z_L [1] c/h	kg	J 10^{-3} kgm^2	M_b Nm	z_L [1] c/h	kg
1500 rpm (4 poles)													
AMHE... 63Z AA	**4**	0.31	3.5	13200	5.4	0.31	3.5	15000	5.2	0.54	3	7500	4.8
AMHE... 63Z BA	**4**	0.35	3.5	12500	6.2	0.35	3.5	14000	6	0.59	3	7500	5.6
AMHE... 63Z CA	**4***	0.38	3.5	11800	6.3	0.38	3.5	13200	6.1	0.61	3	6700	5.7
AMHE... 71Z AA	**4**	0.70	3.5(7.5)[2]	7500	8.1	0.7	3.5(7.5)[2]	8500	7.9	1.13	4	5000	7.5
AMHE... 71Z BA	**4**	0.87	7.5	7250	9.1	0.87	7.5	8150	8.8	1.26	4	4850	7.8
AMHE... 71Z CA	**4***	1.11	7.5	6900	10.4	1.11	7.5	7800	10.1	1.50	4	4500	9.1
AMHE... 80Z XA	**4**	1.49	7.5(15)[2]	6700	12.4	1.49	7.5(15)[2]	6700	12.1	2.37	7	4250	11.0
AMHE... 80Z AA	**4**	2.63	15	5800	15.7	2.63	15	5800	15.7	3.5	7	3500	14.3
AMHE... 90S AA	**4**	3.5	15(40)[2]	5250	20.4	3.5	15(40)[2]	4650	20.5	4.43	7	3250	17.5
AMHE... 90L BA	**4**	3.98	40	4700	25.5	3.98	40	4150	24.8	4.71	7	3000	20
AMHE... 100L AA	**4**	6.08	40(75)[2]	4800	31.8	6.08	40(75)[2]	4250	31.1	8.7	13	2350	26.8
AMHE... 100L BA	**4**	7.24	40(75)[2]	4550	34.3	7.24	40(75)[2]	4050	33.6	9.3	13	2000	29.3
AMHE... 112M AA	**4**	13.01	75	2650	46.1	13.01	75	2370	44.7	15.1	13	1410	36.5
AMHE... 132S AA	**4**	22.0	75(150)[2]	2250	61	22.0	75(150)[2]	2000	60	25.9	30	1180	51
AMHE... 132M BA	**4**	28.7	75(150)[2]	2000	70	28.7	75(150)[2]	1800	69	32.6	30	1000	60
AMHE... 132M CA	**4**	33.4	75(150)[2]	1690	89	33.4	75(150)[2]	1500	87	35.9	30	800	74
AMHE... 160M AA	**4**	69	150(250)[2]	750	118	69	150(250)[2]	670	115	71	30	560	98
AMHE... 160L BA	**4**	90	150(250)[2]	675	136	90	150(250)[2]	600	133	92	30	500	117
AMHE...160L CA	**4**	108	250	650	156	108	250	580	157	105	30	480	126
AMHE...160L DA	**4**	120	250	600	168	120	250	550	168	-[3]	-[3]	-[3]	-[3]

* Higher output (progressive motor)

1) Max. Number of no-load starts/hour with cyclic duration factor 50%
2) On request
3) Motor not available

STANDARD EFFICIENCY BRAKE MOTORS - IE1

EFFICIENCY LEVEL ACCORDING TO IEC 60034-30-1:2014
EFFICIENCY TESTING METHOD IEC 60034-2-1;2014

IE code not applicable to motors 2, 4, 6 poles with PN < 0.75 kW. Efficiency testing method: IEC 60034-2;1996

FOR MAINS VOLTAGE
400 V - 50 HZ

IE1

Type		kW	HP	rpm	M_N Nm	IE1 η 50%	IE1 η 75%	IE1 η 100%	cos φ	I_N 400V	I_N 380-420V	I_A/I_N	M_A/M_N	M_K/M_N
3000 rpm (2 poles)														
AM... 63Z AA	**2**	0.18	0.25	2790	0.6	54.0	58.0	63.0	0.73	0.60	0.65	3.7	3.0	3.1
AM... 63Z BA	**2**	0.25	0.33	2790	0.9	57.0	62.0	66.0	0.70	0.80	0.75	4.5	3.2	3.3
AM... 63Z CA	**2***	0.37	0.5	2800	1.3	54.0	58.0	65.0	0.70	1.20	1.25	4.6	3.4	3.4
AM... 71Z AA	**2**	0.37	0.5	2820	1.3	58.0	64.0	70.0	0.78	1.0	1.2	4.7	3.6	3.6
AM... 71Z BA	**2**	0.55	0.75	2830	1.9	57.0	64.0	71.0	0.77	1.5	1.6	4.8	3.2	3.3
AM... 71Z CA	**2***	0.75	1	2800	2.6	58.9	65.7	72.6	0.76	2.0	2.1	5.2	3.1	3.1
AM... 80Z AA	**2**	0.75	1	2840	2.5	66.3	71.5	73.0	0.78	1.9	2.0	5.0	2.8	2.9
AM... 80Z BA	**2**	1.1	1.5	2810	3.7	72.1	75.0	75.3	0.82	2.5	2.6	4.6	2.4	2.9
AM... 80Z CA	**2***	1.5	2	2825	5.1	74.7	77.5	77.8	0.83	3.3	3.4	5.0	2.9	3.3
AM... 90S AA	**2**	1.5	2	2830	5.1	75.6	78.7	78.6	0.82	3.4	3.5	5.0	3.1	3.0
AM... 90S BA	**2***	1.8	2.5	2805	6.1	74.9	78.0	78.2	0.80	4.2	4.3	4.5	2.6	2.5
AM... 90L CA	**2**	2.2	3	2860	7.3	81.5	82.8	81.8	0.81	4.9	4.9	7.1	4.1	4.0
AM... 90L DA	**2***	3	4	2860	10.0	78.7	81.8	82.2	0.80	6.6	6.8	7.2	3.9	3.8
AM... 100L AA	**2**	3	4	2860	10.0	78.9	81.4	81.5	0.85	6.4	6.7	6.0	3.1	3.3
AM... 100L BA	**2***	4	5.5	2835	13.5	81.1	82.5	81.7	0.88	8.0	8.1	6.2	2.9	2.9
AM... 100L CA	**2***	5.5	7.5	2865	18.3	83.7	84.6	83.3	0.86	11.1	11.3	7.2	3.5	4.1
AM... 112M AA	**2**	4	5.5	2880	13.3	81.9	84.0	83.5	0.82	8.4	8.7	8.0	3.4	3.6
AM... 112M BA	**2***	5.5	7.5	2900	18.1	83.6	84.7	85.0	0.86	10.9	11.2	7.8	3.5	3.6
AM... 112M CA	**2***	7.5	10	2900	24.7	86.7	87.8	87.1	0.87	14.3	14.8	8.7	4.0	4.0
AM... 132S YA	**2**	5.5	7.5	2890	18.2	83.2	84.7	85.0	0.83	11.3	11.4	6.0	2.2	2.3
AM... 132S ZA	**2**	7.5	10	2880	24.9	85.6	86.7	86.1	0.87	14.5	14.9	6.4	2.9	3.1
AM... 132M ZA	**2***	9.2	12.5	2900	30.3	84.7	86.8	87.0	0.84	18.4	18.8	7.0	2.8	3.2
AM... 132M RA	**2***	11	15	2880	36.5	87.1	88.1	88.0	0.85	21.3	21.7	6.9	3.2	3.8
AM... 132M TA	**2***	15	20	2920	49.1	86.4	88.6	88.9	0.83	29.5	30.5	7.0	3.2	3.7
AM... 160M VA	**2**	11	15	2940	35.7	83.4	86.4	87.7	0.83	21.9	22.7	7.4	2.5	3.1
AM... 160M XA	**2**	15	20	2940	48.7	87.3	88.9	88.9	0.85	28.6	29.2	8.1	3.1	3.7
AM... 160L XA	**2**	18.5	25	2950	59.9	88.2	89.7	89.6	0.87	34.3	34.8	8.5	3.6	4.2
AM... 160L RA	**2***	22	30	2940	71.5	88.7	90.5	90.4	0.90	39.1	39.4	8.4	3.0	3.7

* Higher output (progressive motor)

For maximum friction work per stop consult us

STANDARD EFFICIENCY BRAKE MOTORS – IE1

AMBY SERIES – HIGH TORQUE - DC BRAKE

AMBZ SERIES – HIGH TORQUE - AC BRAKE

AMS SERIES – LOW TORQUE - DC BRAKE

IE1

Type		AMBY J 10^{-3} kgm²	AMBY $M_{b\,max}$ Nm	AMBY z_L 1) c/h	AMBY kg	AMBZ J 10^{-3} kgm²	AMBZ $M_{b\,max}$ Nm	AMBZ z_L 1) c/h	AMBZ kg	AMS J 10^{-3} kgm²	AMS M_b Nm	AMS z_L 1) c/h	AMS kg
3000 rpm (2 poles)													
AM... 63Z AA	**2**	0.19	3.5	6300	5.7	0.19	3.5	7100	5.5	0.43	3	3550	5.1
AM... 63Z BA	**2**	0.21	3.5	6300	6.2	0.21	3.5	7100	6.0	0.45	3	3150	5.6
AM... 63Z CA	**2***	0.24	3.5	6000	6.5	0.24	3.5	6700	6.3	0.48	3	3150	5.9
AM... 71Z AA	**2**	0.38	3.5(7.5)2)	5000	8.2	0.38	3.5(7.5)2)	5600	8.0	0.81	4	2650	7.6
AM... 71Z BA	**2**	0.48	7.5	4750	9.3	0.48	7.5	5300	9.0	0.87	4	2650	8.0
AM... 71Z CA	**2***	0.57	7.5	4500	10.3	0.57	7.5	5000	10.0	0.96	4	2360	9.0
AM... 80Z AA	**2**	0.70	7.5(15)2)	3350	12.6	0.70	7.5(15)2)	3750	12.3	1.59	7	1700	11.2
AM... 80Z BA	**2**	0.91	15	3150	14.6	0.91	15	3550	14.5	1.75	7	1700	12.3
AM... 80Z CA	**2***	1.07	15	2650	16.2	1.07	15	3000	16.1	1.91	7	1400	13.9
AM... 90S AA	**2**	1.39	15(40)2)	3150	18.7	1.39	15(40)2)	3550	18.6	2.31	7	1400	15.7
AM... 90S BA	**2***	1.39	15(40)2)	3150	18.7	1.39	15(40)2)	3550	18.6	2.31	7	1400	15.7
AM... 90L CA	**2**	1.84	15(40)2)	2500	22.0	1.84	15(40)2)	2800	21.9	2.76	7	1200	19.0
AM... 90L DA	**2***	2.32	40	2360	26.5	2.32	40	2650	27.2	3.06	7	1120	21.7
AM... 100L AA	**2**	2.71	40(75)2)	2360	27.9	2.71	40(75)2)	2650	28.6	5.3	13	1120	23.6
AM... 100L BA	**2***	3.23	40(75)2)	2120	28.3	3.23	40(75)2)	2360	29.0	5.8	13	1000	24
AM... 100L CA	**2***	4.26	40(75)2)	2000	34.5	4.26	40(75)2)	2230	35.2	6.9	13	900	30.2
AM... 112M AA	**2**	5.0	40(75)2)	1120	33.8	5.0	40(75)2)	1250	34.5	7.6	13	750	29.0
AM... 112M BA	**2***	6.1	40(75)2)	1000	36.9	6.1	40(75)2)	1120	37.6	8.7	13	670	32.1
AM... 112M CA	**2***	8.8	75	900	46.5	8.8	75	1000	47.9	10.9	13	600	38.3
AM... 132S YA	**2**	10.4	75(150)2)	710	55	10.4	75(150)2)	800	56	14.2	30	560	46.5
AM... 132S ZA	**2**	13.1	75(150)2)	670	61	13.1	75(150)2)	750	62	17.0	30	480	52
AM... 132M ZA	**2***	14.1	75(150)2)	600	66	14.1	75(150)2)	670	67	18.0	30	430	57
AM... 132M RA	**2***	16.9	75(150)2)	550	70	16.9	75(150)2)	610	72	20.8	30	380	62
AM... 132M TA	**2***	22.0	150	500	81	22	150	555	83	- 3)	- 3)	- 3)	- 3)
AM... 160M VA	**2**	35.3	150(250)2)	400	104	35.3	150(250)2)	445	106	37.2	30	315	87
AM... 160M XA	**2**	46.1	150(250)2)	350	121	46.1	150(250)2)	385	123	48.1	30	300	104
AM... 160L XA	**2**	59	150(250)2)	335	135	59	150(250)2)	370	137	62	30	280	118
AM... 160L RA	**2***	59	150(250)2)	335	135	59	150(250)2)	370	137	62	30	280	118

* Higher output (progressive motor)

1) Max. Number of no-load starts/hour with cyclic duration factor 50%
2) On request
3) Motor not available

STANDARD EFFICIENCY BRAKE MOTORS - IE1

EFFICIENCY LEVEL ACCORDING TO IEC 60034-30-1:2014
EFFICIENCY TESTING METHOD IEC 60034-2-1;2014

IE code not applicable to motors 2, 4, 6 poles with PN < 0.75 kW. Efficiency testing method: IEC 60034-2;1996

FOR MAINS VOLTAGE
400 V - 50 HZ

IE1

Type		kW	HP	rpm	M_N Nm	IE1 η 50%	IE1 η 75%	IE1 η 100%	cos φ	I_N 400V	I_N 380-420V	I_A/I_N	M_A/M_N	M_K/M_N
1500 rpm (4 poles)														
AM... 63Z AA	**4**	0.12	0.16	1350	0.8	46.0	50.0	57.0	0.65	0.50	0.55	2.4	2.0	2.0
AM... 63Z BA	**4**	0.18	0.25	1330	1.3	47.0	50.0	58.0	0.70	0.65	0.70	2.3	1.9	1.9
AM... 63Z CA	**4***	0.25	0.33	1360	1.8	49.0	52.5	58.0	0.74	0.85	0.90	2.7	2.2	2.1
AM... 71Z AA	**4**	0.25	0.33	1340	1.8	55.0	59.0	64.0	0.66	0.90	1.00	3.2	1.9	2.0
AM... 71Z BA	**4**	0.37	0.5	1370	2.6	60.0	63.0	67.0	0.67	1.20	1.25	3.3	2.2	2.2
AM... 71Z CA	**4***	0.55	0.75	1380	3.8	61.0	64.0	69.0	0.68	1.70	1.80	3.6	2.4	2.4
AM... 80Z AA	**4**	0.55	0.75	1400	3.8	67.0	69.0	70.0	0.72	1.6	1.7	3.6	2.6	2.6
AM... 80Z BA	**4**	0.75	1.0	1410	5.1	68.7	70.8	72.4	0.72	2.1	2.2	4.4	2.8	2.8
AM... 80Z CA	**4***	1.1	1.5	1385	7.6	73.4	75.7	75.2	0.77	2.8	2.9	4.4	2.5	2.6
AM... 90S AA	**4**	1.1	1.5	1400	7.5	75.8	76.0	75.4	0.78	2.7	2.9	5.2	2.5	2.8
AM... 90L BA	**4**	1.5	2.0	1400	10.2	77.6	77.8	77.5	0.78	3.6	3.7	5.7	2.8	3.0
AM... 90L CA	**4***	1.8	2.5	1380	12.5	76.3	76.5	75.9	0.81	4.2	4.3	5.5	2.7	2.9
AM... 90L DA	**4***	2.2	3.0	1400	15.0	78.3	78.5	77.9	0.77	5.3	5.5	4.8	2.9	3.2
AM... 100L AA	**4**	2.2	3.0	1435	14.6	76.5	79.1	79.9	0.74	5.4	5.6	5.3	2.5	2.7
AM... 100L BA	**4**	3.0	4.0	1425	20.1	82.0	83.0	81.6	0.78	6.8	6.9	4.6	2.4	2.5
AM... 100L CA	**4***	4.0	5.5	1400	27.3	80.8	81.8	80.4	0.78	9.2	9.3	6.0	2.6	2.9
AM... 112M AA	**4**	4.0	5.5	1430	26.7	83.2	83.9	83.1	0.82	8.5	8.8	6.3	2.2	2.8
AM... 112M BA	**4***	5.5	7.5	1430	36.7	84.1	84.8	84.0	0.83	11.4	11.7	6.5	2.2	2.9
AM ... 132S AA	**4**	5.5	7.5	1460	36.1	85.1	86.8	84.7	0.84	11.0	11.5	7.0	2.6	3.0
AM ... 132M BA	**4**	7.5	10	1460	49.7	85.8	87.6	86.0	0.84	14.9	15.5	8.2	2.6	3.7
AM ... 132M CA	**4***	9.2	12.5	1455	60.3	86.5	87.5	86.9	0.83	18.3	18.9	8.2	2.6	3.7
AM ... 132M DA	**4***	11	15	1450	72.4	84.7	86.5	87.6	0.79	23.0	23.5	8.2	2.6	3.7
AM ... 160M AA	**4**	11	15	1470	71.9	87.0	88.9	87.6	0.82	22.0	22.7	8.2	2.1	2.8
AM ... 160L BA	**4**	15	20	1465	98.1	88.1	89.6	88.7	0.84	29.0	29.6	8.1	2.1	2.8
AM ... 160L CA	**4***	18.5	25	1460	121.8	88.9	90.1	89.3	0.84	35.5	36.0	8.2	2.1	2.8
AM ... 160L DA	**4***	22	30	1460	143.9	89.0	90.1	89.9	0.86	41.0	42.0	8.2	2.1	2.8

* Higher output (progressive motor)

For maximum friction work per stop consult us

STANDARD EFFICIENCY BRAKE MOTORS – IE1

AMBY SERIES – HIGH TORQUE - DC BRAKE

AMBZ SERIES – HIGH TORQUE - AC BRAKE

AMS SERIES – LOW TORQUE - DC BRAKE

IE1

		AMBY				AMBZ				AMS			
Type		J 10^{-3} kgm^2	$M_{b\,max}$ Nm	z_L 1) c/h	kg	J 10^{-3} kgm^2	$M_{b\,max}$ Nm	z_L 1) c/h	kg	J 10^{-3} kgm^2	M_b Nm	z_L 1) c/h	kg
1500 rpm (4 poles)													
AM... 63Z AA	**4**	0.31	3.5	13200	5.4	0.31	3.5	15000	5.2	0.54	3	7500	4.8
AM... 63Z BA	**4**	0.35	3.5	12500	6.2	0.35	3.5	14000	6.0	0.59	3	7500	5.6
AM... 63Z CA	**4***	0.38	3.5	11800	6.3	0.38	3.5	13200	6.1	0.61	3	6700	5.7
AM... 71Z AA	**4**	0.70	3.5(7.5) 2)	7500	8.1	0.70	3.5(7.5) 2)	8500	7.9	1.13	4	5000	7.5
AM... 71Z BA	**4**	0.87	7.5	7250	9.1	0.87	7.5	8150	8.8	1.26	4	4850	7.8
AM... 71Z CA	**4***	1.11	7.5	6900	10.4	1.11	7.5	7800	10.1	1.50	4	4500	9.1
AM... 80Z AA	**4**	1.49	7.5(15) 2)	6700	12.4	1.49	7.5(15) 2)	6700	12.1	2.37	7	4250	11.0
AM... 80Z BA	**4**	1.93	15	6300	14.4	1.93	15	6300	14.3	2.77	7	4000	12.1
AM... 80Z CA	**4***	2.33	15	6000	15.7	2.33	15	6000	15.6	3.16	7	3750	13.4
AM... 90S AA	**4**	2.36	15(40) 2)	5000	18.0	2.36	15(40) 2)	5650	17.9	3.28	7	3550	15.5
AM... 90L BA	**4**	3.12	40	4750	21.1	3.12	40	5350	21.8	3.85	7	3350	16.3
AM... 90L CA	**4***	3.69	40	4550	22.3	3.69	40	5150	23.0	4.43	7	3250	17.5
AM... 90L DA	**4***	3.98	40	4300	24.8	3.98	40	4850	25.5	4.71	7	3150	20.0
AM... 100L AA	**4**	4.83	40(75) 2)	4500	28.1	4.83	40(75) 2)	5050	28.8	7.4	13	2500	23.8
AM... 100L BA	**4**	6.08	40(75) 2)	4250	31.1	6.08	40(75) 2)	4800	31.8	8.7	13	2350	26.8
AM... 100L CA	**4***	7.24	75	4000	37.0	7.24	75	4500	38.4	9.3	13	2200	29.3
AM... 112M AA	**4**	11.60	75	2500	42.4	11.60	75	2800	43.8	13.7	13	1500	34.2
AM... 112M BA	**4***	14.42	75	2240	46.9	14.42	75	2500	48.3	16.5	13	1320	38.7
AM ... 132S AA	**4**	22.0	75(150) 2)	2000	60	22.0	75(150) 2)	2250	61	25.9	30	1180	51
AM ... 132M BA	**4**	28.7	75(150) 2)	1800	69	28.7	75(150) 2)	2000	70	32.6	30	1000	60
AM ... 132M CA	**4***	33.4	150	1500	87	33.4	150	1690	89	35.9	30	800	74
AM ... 132M DA	**4***	33.4	150	1500	87	33.4	150	1690	89	35.9	30	800	74
AM ... 160M AA	**4**	69	150(250) 2)	670	115	69	150(250) 2)	750	118	71	30	560	98
AM ... 160L BA	**4**	90	150(250) 2)	600	133	90	150(250) 2)	675	136	92	30	500	117
AM ... 160L CA	**4***	108	250	580	157	108	250	650	156	105	30	480	126
AM ... 160L DA	**4***	120	250	550	168	120	250	600	168	- 3)	- 3)	- 3)	- 3)

* Higher output (progressive motor)

1) Max. Number of no-load starts/hour with cyclic duration factor 50%
2) On request
3) Motor not available

STANDARD EFFICIENCY BRAKE MOTORS - IE1

EFFICIENCY LEVEL ACCORDING TO IEC 60034-30-1:2014
EFFICIENCY TESTING METHOD IEC 60034-2-1;2014

IE code not applicable to motors 2, 4, 6 poles with PN < 0.75 kW. Efficiency testing method: IEC 60034-2;1996

FOR MAINS VOLTAGE
400 V - 50 HZ

IE1

Type		kW	HP	rpm	M_N Nm	IE1 η 50%	IE1 η 75%	IE1 η 100%	cos φ	I_N 400V	I_N 380-420V	I_A/I_N	M_A/M_N	M_K/M_N
1000 rpm (6 poles)														
AM... 71Z AA	**6**	0.18	0.25	880	2.0	46.0	48.0	53.0	0.60	0.85	0.9	2.2	1.6	1.6
AM... 71Z BA	**6**	0.25	0.33	880	2.7	46.0	50.0	54.0	0.62	1.10	1.2	2.5	1.7	1.7
AM... 80Z AA	**6**	0.37	0.5	920	3.8	47.0	58.0	60.0	0.70	1.25	1.3	2.7	1.6	2.1
AM... 80Z BA	**6**	0.55	0.75	920	5.7	60.0	64.0	68.0	0.67	1.75	1.8	2.9	2.2	2.1
AM... 90S AA	**6**	0.75	1	910	7.9	70.5	72.5	71.5	0.63	2.4	2.5	2.9	1.7	1.7
AM... 90L BA	**6**	1.1	1.5	920	11.4	72.0	73.5	73.0	0.66	3.3	3.4	3.0	1.7	1.7
AM... 100L AA	**6**	1.5	2	930	15.4	73.3	75.8	75.3	0.69	4.2	4.4	3.7	1.8	2.3
AM... 100L BA	**6***	1.8	2.5	940	18.3	74.6	77.1	76.6	0.67	5.1	5.3	4.2	2.4	2.8
AM... 112M AA	**6**	2.2	3	940	22.4	77.0	79.0	78.0	0.74	5.3	5.4	4.4	2.4	2.6
AM... 112M CA	**6***	3	4	940	30.5	81.8	82.8	82.8	0.74	7.0	7.2	5.3	2.9	2.9
AM... 132S ZA	**6**	3	4	950	30.2	79.5	81.5	81.3	0.72	7.4	7.5	4.9	2.0	2.4
AM... 132M YA	**6**	4	5.5	950	40.2	81.4	83.1	82.7	0.71	9.9	10.5	4.5	2.2	2.5
AM... 132M ZA	**6**	5.5	7.5	950	55.3	82.2	83.6	83.6	0.71	13.5	13.5	4.1	2.2	2.2
AM... 160M ZA	**6**	7.5	10	970	73.8	84.4	86.5	86.3	0.78	16.0	16.3	6.2	2.8	3.2
AM... 160L ZA	**6**	11	15	960	109.4	88.1	88.5	87.8	0.78	23.4	24.0	6.0	2.5	3.5

* Higher output (progressive motor)

EFFICIENCY TESTING METHOD IEC 60034-2;1996

Type		kW	HP	rpm	M_N Nm	η 50%	η 75%	η 100%	cos φ	I_N 400V	I_N 380-420V	I_A/I_N	M_A/M_N	M_K/M_N
750 rpm (8 poles)														
AM... 71Z AA	**8**	0.12	0.16	670	1.7	40	44	50	0.55	0.65	0.70	2.4	2.5	2.5
AM... 80Z AA	**8**	0.25	0.33	680	3.5	40	47	51	0.62	1.1	1.2	2.2	1.8	2.0
AM... 90S AA	**8**	0.37	0.5	680	5.2	52	58	59	0.53	1.7	1.8	2.1	1.4	1.6
AM... 90L BA	**8**	0.55	0.75	680	7.7	52	58	59	0.54	2.5	2.7	2.1	1.4	1.6
AM... 100L AA	**8**	0.75	1.0	690	10.4	59	64	65	0.65	2.6	2.8	3.0	1.6	1.7
AM... 100L BA	**8**	1.1	1.5	690	15.2	59	67	68	0.62	3.9	4.0	3.0	1.9	1.6
AM... 112M AA	**8**	1.5	2.0	696	20.6	66	69	70	0.66	4.6	4.8	4.0	1.8	2.4
AM... 132S ZA	**8**	2.2	3.0	710	29.6	79.3	80.5	78.8	0.64	6.4	6.6	3.4	1.7	1.7
AM... 132M ZA	**8**	3.0	4.0	710	40.4	81.3	82.0	79.8	0.67	8.1	8.4	3.6	1.7	1.9
AM... 160M YA	**8**	4.0	5.5	700	54.6	84.9	84.5	84.4	0.72	9.5	9.7	4.5	1.8	2.2
AM... 160M ZA	**8**	5.5	7.5	720	72.9	85.6	85.2	85.0	0.73	12.8	13.3	4.0	1.8	2.3
AM... 160L ZA	**8**	7.5	10	710	100.9	86.3	85.8	85.5	0.74	17.1	17.8	4.0	1.8	2.3

For maximum friction work per stop consult us

STANDARD EFFICIENCY BRAKE MOTORS – IE1

AMBY SERIES – HIGH TORQUE - DC BRAKE

AMBZ SERIES – HIGH TORQUE - AC BRAKE

AMS SERIES – LOW TORQUE - DC BRAKE

IE1

Type		AMBY J 10^{-3} kgm²	AMBY $M_{b\,max}$ Nm	AMBY z_L 1) c/h	AMBY kg	AMBZ J 10^{-3} kgm²	AMBZ $M_{b\,max}$ Nm	AMBZ z_L 1) c/h	AMBZ kg	AMS J 10^{-3} kgm²	AMS M_b Nm	AMS z_L 1) c/h	AMS kg
1000 rpm (6 poles)													
AM... 71Z AA	**6**	1.14	7.5	16000	9.2	1.14	7.5	18000	8.9	1.53	4	10000	7.9
AM... 71Z BA	**6**	1.30	7.5	15000	9.7	1.30	7.5	16800	9.4	1.68	4	9500	8.4
AM... 80Z AA	**6**	1.94	7.5(15) 2)	9000	12.2	1.94	7.5(15) 2)	10100	11.9	2.82	7	6300	10.8
AM... 80Z BA	**6**	2.52	15	8500	14.5	2.52	15	9550	14.4	3.35	7	6000	12.2
AM... 90S AA	**6**	3.07	15(40) 2)	6700	17.6	3.07	15(40) 2)	7500	17.5	4	7	5300	14.6
AM... 90L BA	**6**	4.73	40	6300	22.8	4.73	40	7050	23.5	5	7	5000	18.0
AM... 100L AA	**6**	6.7	40(75) 2)	5600	26.1	6.7	40(75) 2)	6300	26.8	9	13	4500	21.8
AM... 100L BA	**6***	9.3	40(75) 2)	4750	30.6	9.3	40(75) 2)	5300	31.3	12	13	3750	26.3
AM... 112M AA	**6**	13.2	40(75) 2)	3150	35.5	13.2	40(75) 2)	3500	36.2	16	13	2650	30.7
AM... 112M CA	**6***	18.8	75	3000	52	18.8	75	3350	53	21	13	2500	43.7
AM... 132S ZA	**6**	22.3	75(150) 2)	2000	55	22.3	75(150) 2)	2250	56	26	30	1600	46.2
AM... 132M YA	**6**	29.8	75(150) 2)	1800	60	29.8	75(150) 2)	2000	62	34	30	1500	52
AM... 132M ZA	**6**	39.7	150	1700	77	39.7	150	1900	80	42	30	1400	65
AM... 160M ZA	**6**	106	150(250) 2)	1120	119	106	150(250) 2)	1260	122	108	30	900	103
AM... 160L ZA	**6**	139	150(250) 2)	1000	140	139	150(250) 2)	1120	143	141	30	850	124

* Higher output (progressive motor)

1) Max. Number of no-load starts/hour with cyclic duration factor 50%
2) On request

Type		AMBY J 10^{-3} kgm²	AMBY $M_{b\,max}$ Nm	AMBY z_L 1) c/h	AMBY kg	AMBZ J 10^{-3} kgm²	AMBZ $M_{b\,max}$ Nm	AMBZ z_L 1) c/h	AMBZ kg	AMS J 10^{-3} kgm²	AMS M_b Nm	AMS z_L 1) c/h	AMS kg
750 rpm (8 poles)													
AM... 71Z AA	**8**	0.87	7.5	18000	9.1	0.87	7.5	20250	8.8	1.26	4	15000	7.8
AM... 80Z AA	**8**	1.94	7.5(15) 2)	15000	12.2	1.94	7.5(15) 2)	16750	11.9	2.82	7	11200	10.8
AM... 90S AA	**8**	3.07	15(40) 2)	8000	17.4	3.07	15(40) 2)	9000	17.3	4.00	7	6300	14.4
AM... 90L BA	**8**	4.54	15(40) 2)	7500	21.0	4.54	15(40) 2)	8400	20.9	5.5	7	6000	18.0
AM... 100L AA	**8**	6.7	40(75) 2)	6700	26.2	6.7	40(75) 2)	7550	26.9	9.3	13	5000	21.9
AM... 100L BA	**8**	9.3	40(75) 2)	6000	31.2	9.3	40(75) 2)	6750	31.9	11.9	13	4500	26.9
AM... 112M AA	**8**	15.7	40(75) 2)	3550	44.5	15.7	40(75) 2)	4000	45.2	18.3	13	3150	39.7
AM... 132S ZA	**8**	29.8	75(150) 2)	2500	63	29.8	75(150) 2)	2800	65	33.7	30	2000	55
AM... 132M ZA	**8**	39.7	150	2240	76	39.7	150	2500	74	42.2	30	1800	64
AM... 160M YA	**8**	79	150(250) 2)	1320	102	79	150(250) 2)	1475	104	80	30	1000	85
AM... 160M ZA	**8**	106	150(250) 2)	1120	119	106	150(250) 2)	1250	121	108	30	900	102
AM... 160L ZA	**8**	139	150(250) 2)	1000	140	139	150(250) 2)	1120	142	141	30	850	123

1) Max. Number of no-load starts/hour with cyclic duration factor 50%
2) On request

BRAKE MOTORS FRAME SIZE 71 - 160 IM B3
AMPEBY - AMPEBZ SERIES

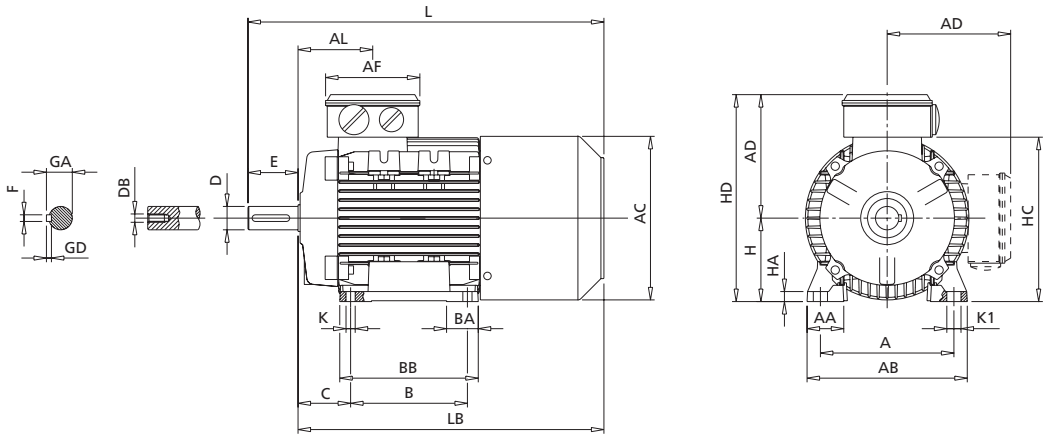

IEC	Poles	H	A	B	C	K[1]	AB	BB	AD[2]	HD[2]	AC	HC	HA
71	2	71	112	90	45	8	135	108	110	181	138	142	8
80	2 - 4	80	125	100	50	10	153	125	129	208	156	161	9.5
90S	2 - 4	90	140	100	56	10	170	150	137	227	178	180	11
90L	2 - 4	90	140	125	56	10	170	150	137	227	178	180	11
100	2	100	160	140	63	11	192	166	144	244	192	197	12
	4	100	160	140	63	11	192	166	154	254	197	192	12
112	2 - 4	112	190	140	70	12.5	220	175	160	272	222	225	15
132S	2 - 4	132	216	140	89	12	256	180	195	326	259	261	17
132M	2 - 4	132	216	178	89	12	256	218	195	326	259	261	17
160M	2 - 4	160	254	210	108	14	320	270	238	397	316	317	23
160L	2 - 4	160	254	254	108	14	320	310	238	397	316	317	23

IEC	Poles	K1	L	LB	AL	AF	BA	AA	D	E	F	GD	GA	DB[3]
71	2	11	300	270	69	92	28	31	14	30	5	5	16	M5
80	2 - 4	14	350	310	79	116	29	35	19	40	6	6	21.5	M6
90S	2 - 4	15	403	353	85	116	28/53	37	24	50	8	7	27	M8
90L	2 - 4	15	403	353	85	116	28/53	37	24	50	8	7	27	M8
100	2	17	465	405	91	116	38	44	28	60	8	7	31	M10
	4	17	463	403	92	118	41	44	28	60	8	7	31	M10
112	2 - 4	19	487	427	92	116	46	48	28	60	8	7	31	M10
132S	2 - 4	20	592	512	100	137	45	59	38	80	10	8	41	M12
132M	2 - 4	20	612	532	120	137	45	59	38	80	10	8	41	M12
160M	2 - 4	18	721	611	146	155	65	76	42	110	12	8	45	M16
160L	2 - 4	18	763	653	168	155	65	76	42	110	12	8	45	M16

1) Clearance hole for screw
2) Maximum dimension
3) Centering holes in shaft extensions to DIN 332 part 2

BRAKE MOTORS FRAME SIZE 71 - 160 IM B3
AMPES SERIES

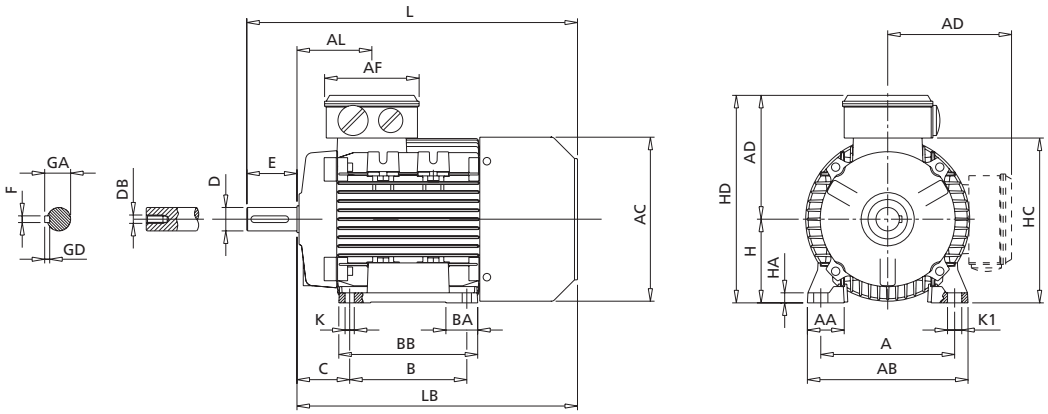

IEC	Poles	H	A	B	C	K[1]	AB	BB	AD[2]	HD[2]	AC	HC	HA
71	2	71	112	90	45	8	135	108	110	181	139	142	9
80	2 - 4	80	125	100	50	9.5	153	125	128	208	157	161	9.5
90S	2 - 4	90	140	100	56	10	170	150	137	227	177	180	11
90L	2 - 4	90	140	125	56	10	170	150	137	227	177	180	11
100	2	100	160	140	63	11	192	166	144	244	196	197	12
	4	100	160	140	63	11	192	166	144	244	197	192	12
112	2 - 4	112	190	140	70	12.5	220	176	160	272	222	225	15
132S	2 - 4	132	216	140	89	12	256	180	195	326	248	261	17
132M	2 - 4	132	216	178	89	12	256	218	195	326	248	261	17
160M	2 - 4	160	254	210	108	14	320	270	238	397	316	317	23
160L	2 - 4	160	254	254	108	14	320	310	238	397	316	317	23

IEC	Poles	K1	L	LB	AL	AF	BA	AA	D	E	F	GD	GA	DB[3]
71	2	11	255	225	69	92	28	31	14	30	5	5	16	M5
80	2 - 4	14	294	254	79	116	29	35	19	40	6	6	21.5	M6
90S	2 - 4	15	340	290	85	116	28/53	37	24	50	8	7	27	M8
90L	2 - 4	15	340	290	85	116	28/53	37	24	50	8	7	27	M8
100	2	17	379	319	91	116	38	44	28	60	8	7	31	M10
	4	17	382	322	92	118	41	44	28	60	8	7	31	M10
112	2 - 4	19	396	336	92	116	46	48	28	60	8	7	31	M10
132S	2 - 4	20	480	400	100	137	45	59	38	80	10	8	41	M12
132M	2 - 4	20	500	420	120	137	45	59	38	80	10	8	41	M12
160M	2 - 4	18	614	504	146	155	65	76	42	110	12	8	45	M16
160L	2 - 4	18	658	548	168	155	65	76	42	110	12	8	45	M16

1) Clearance hole for screw
2) Maximum dimension
3) Centering holes in shaft extensions to DIN 332 part 2

BRAKE MOTORS FRAME SIZE 63-160 IM B3
AMHEBY - AMHEBZ - AMBY - AMBZ SERIES

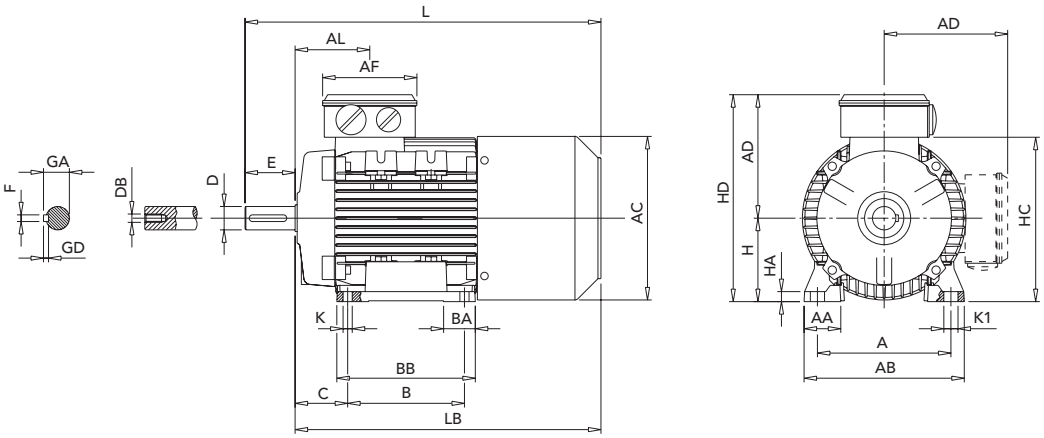

IEC	H	A	B	C	K [1]	AB	BB	AD [2]	HD [2]	AC	HC	HA
63	63	100	80	40	7	120	100	96	159	124	120	8
71	71	112	90	45	8	135	108	110	181	138	142	8
80	80	125	100	50	10	153	125	129	208	156	161	9.5
90S	90	140	100	56	10	170	150	137	227	178	180	11
90L	90	140	125	56	10	170	150	137	227	178	180	11
100	100	160	140	63	11	192	166	144	244	192	197	12
112	112	190	140	70	12.5	220	175	160	272	222	225	15
132S	132	216	140	89	12	256	180	195	326	259	261	17
132M	132	216	178	89	12	256	218	195	326	259	261	17
160M	160	254	210	108	14	320	270	238	397	316	317	23
160L	160	254	254	108	14	320	310	238	397	316	317	23

IEC	K1	L	LB	AL	AF	BA	AA	D	E	F	GD	GA	DB [3]
63	11	267	244	63	92	29	30	11	23	4	4	12.5	M4
71	11	300	270	69	92	28	31	14	30	5	5	16	M5
80	14	350	310	79	116	29	35	19	40	6	6	21.5	M6
90S	15	403	353	85	116	28/53	37	24	50	8	7	27	M8
90L	15	403	353	85	116	28/53	37	24	50	8	7	27	M8
100	17	465	405	91	116	38	44	28	60	8	7	31	M10
112	19	487	427	92	116	46	48	28	60	8	7	31	M10
132S	20	592	512	100	137	45	59	38	80	10	8	41	M12
132M	20	612	532	120	137	45	59	38	80	10	8	41	M12
160M	18	721	611	146	155	65	76	42	110	12	8	45	M16
160L	18	763	653	168	155	65	76	42	110	12	8	45	M16

1) Clearance hole for screw
2) Maximum dimension
3) Centering holes in shaft extensions to DIN 332 part 2

BRAKE MOTORS FRAME SIZE 63-160 IM B3
AMHES - AMS SERIES

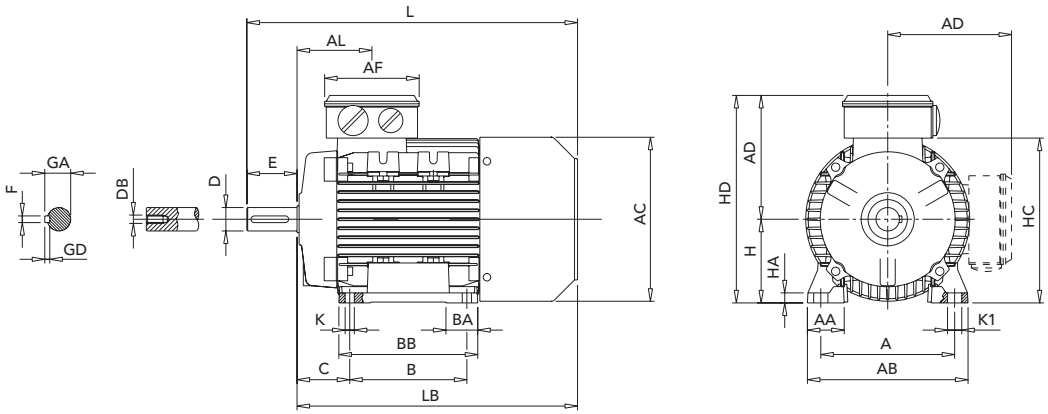

IEC	H	A	B	C	K [1]	AB	BB	AD [2]	HD [2]	AC	HC	HA
63	63	100	80	40	7	120	100	96	159	124	120	8
71	71	112	90	45	8	135	108	110	181	139	142	9
80	80	125	100	50	9.5	153	125	128	208	157	161	9.5
90S	90	140	100	56	10	170	150	137	227	177	180	11
90L	90	140	125	56	10	170	150	137	227	177	180	11
100	100	160	140	63	11	192	166	144	244	196	197	12
112	112	190	140	70	12.5	220	176	160	272	222	225	15
132S	132	216	140	89	12	256	180	195	326	248	261	17
132M	132	216	178	89	12	256	218	195	326	248	261	17
160M	160	254	210	108	14	320	270	238	397	316	317	23
160L	160	254	254	108	14	320	310	238	397	316	317	23

IEC	K1	L	LB	AL	AF	BA	AA	D	E	F	GD	GA	DB [3]
63	11	226	203	63	92	29	30	11	23	4	4	12.5	M4
71	11	255	225	69	92	28	31	14	30	5	5	16	M5
80	14	294	254	79	116	29	35	19	40	6	6	21.5	M6
90S	15	340	290	85	116	28/53	37	24	50	8	7	27	M8
90L	15	340	290	85	116	28/53	37	24	50	8	7	27	M8
100	17	379	319	91	116	38	44	28	60	8	7	31	M10
112	19	396	336	92	116	46	48	28	60	8	7	31	M10
132S	20	480	400	100	137	45	59	38	80	10	8	41	M12
132M	20	500	420	120	137	45	59	38	80	10	8	41	M12
160M	18	614	504	146	155	65	76	42	110	12	8	45	M16
160L	18	658	548	168	155	65	76	42	110	12	8	45	M16

1) Clearance hole for screw
2) Maximum dimension
3) Centering holes in shaft extensions to DIN 332 part 2

BRAKE MOTORS FRAME SIZE 63-160 IM B5-IM B14
AMPEBY - AMPEBZ - AMPES - AMHEBY - AMHEBZ - AMHES - AMBY - AMBZ - AMS SERIES

IM B14

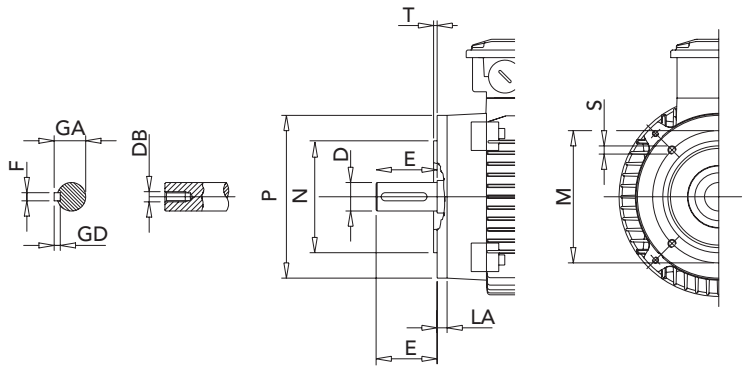

IM B5

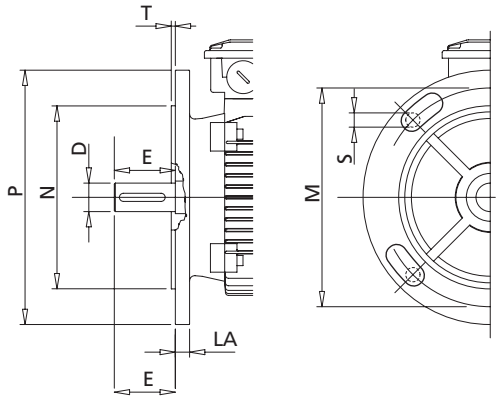

	SMALL FLANGE B14						LARGE FLANGE B14						FLANGE B5					
IEC	P	N	LA	M	T	S	P	N	LA	M	T	S	M	N	P	T	LA	S[1]
63	90	60	8	75	2.5	M5	120	80	8	100	2.5	M6	115	95	140	3	8	M8
71	105	70	8	85	2.5	M6	140	95	8	115	3	M8	130	110	160	3.5	10	M8
80	120	80	9	100	3	M6	160	110	8.5	130	3.5	M8	165	130	200	3.5	10	M10
90	140	95	9	115	3	M8	160	110	9	130	3.5	M8	165	130	200	3.5	12	M10
100	160	110	10	130	3.5	M8	200	130	12	165	3.5	M10	215	180	250	4	14	M12
112	160	110	10	130	3.5	M8	200	130	12	165	3.5	M10	215	180	250	4	14	M12
132	200	130	23	165	3.5	M10	250	180	12	215	4	M12	265	230	300	4	14	M12
160	250	180	20	215	4	M12	300	230	12	265	5	M16	300	250	350	5	15	M16

1) Clearence hole for screw. Hole as standard for 132 to 160 frame size

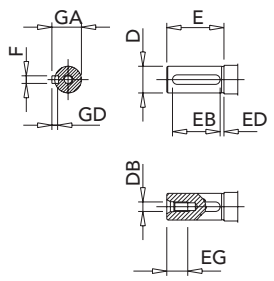

IEC	D	E	F h9	GD	GA	DB[1]	EG	EB	ED	
63		11 j6	23	4	4	12.5	M4	10	15	4
71		14 j6	30	5	5	16	M5	12.5	20	4
80		19 j6	40	6	6	21.5	M6	16	30	4
90		24 j6	50	8	7	27	M8	19	40	4
100		28 j6	60	8	7	31	M10	22	50	4
112		28 j6	60	8	7	31	M10	22	50	4
132		38 k6	80	10	8	41	M12	28	70	4
160		42 k6	110	12	8	45	M16	36	100	4

1) Centering holes in shaft extension to DIN 332 part 2

FSC
www.fsc.org
MIX
Paper from responsible sources
FSC® C006288

The internal pages of this catalogue are made with Freelife Cento by Fedrigoni, the eco-friendly 100% recycled paper produced with recovered waste and low $C0_2$ emissions.

All technical data, outputs, dimensions and weights stated in this catalogue are subject to change without prior notice. The illustrations are not binding.

Printed in June 2024.

PRODUCT RANGE OVERVIEW

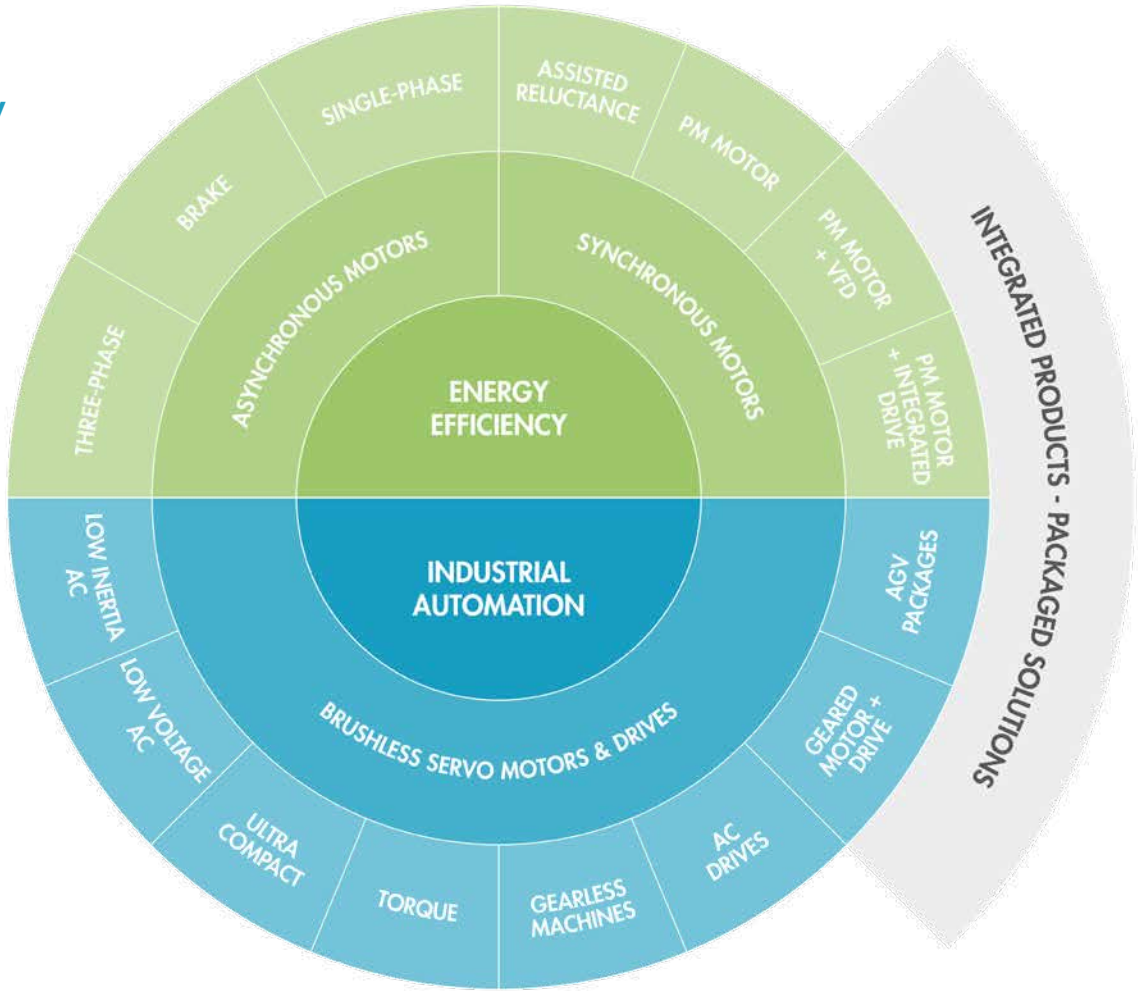

THREE-PHASE MOTORS

FIRST IN ENERGY SAVING

IE3 IE4 ENERGY c UL us

PM MOTOR & DRIVE PACKAGES

IE4 IE5 c UL us

PM MOTORS WITH INTEGRATED DRIVE

IES2 c UL us

APPLICATION RANGE OVERVIEW

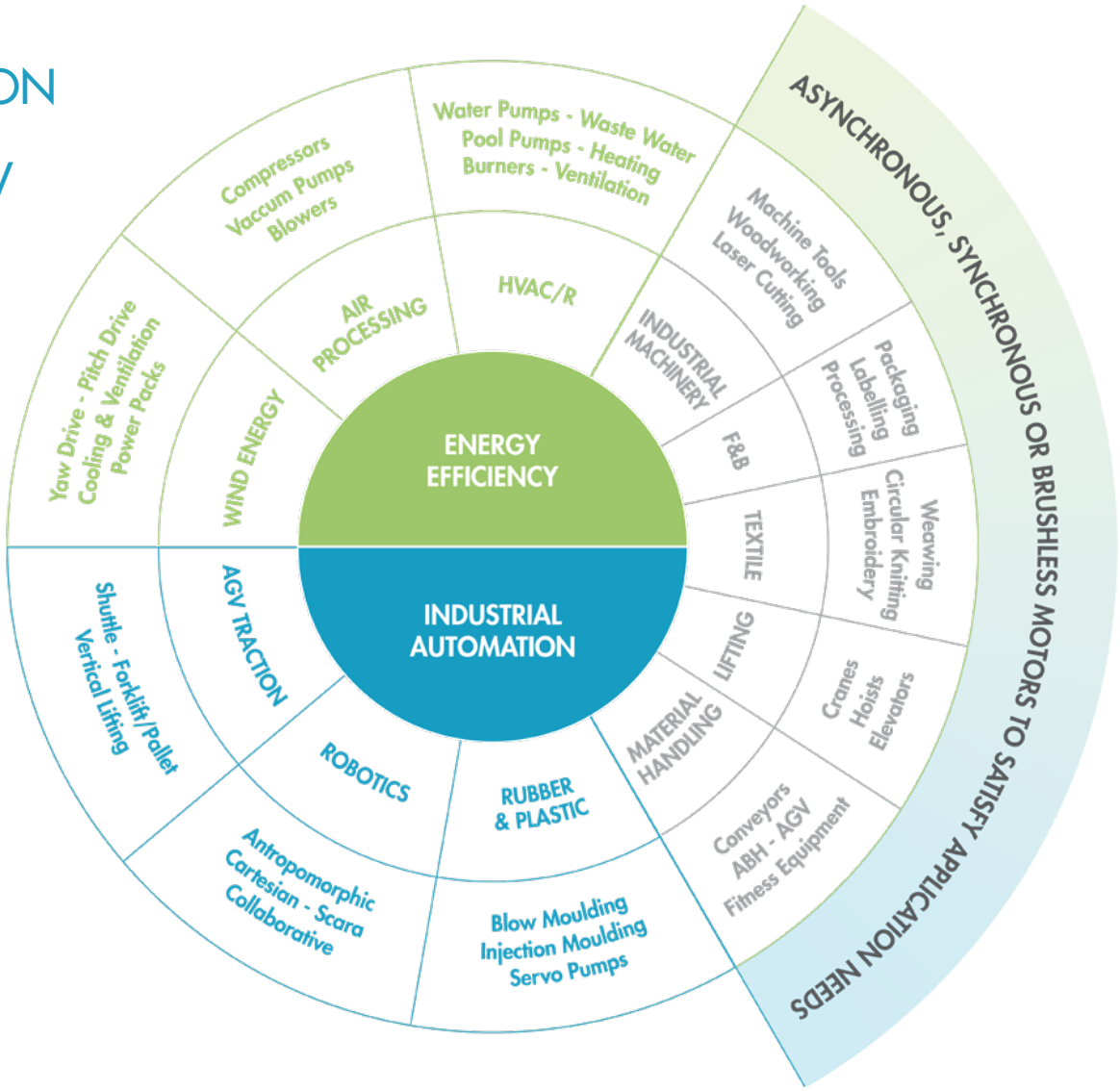

DIRECT DRIVE MOTORS WITH INTEGRATED DRIVE

Intertek

SERVO MOTORS & DRIVES

TOP PERFORMANCE, REDUCED DIMENSIONS

SMARTRIS

PACKAGED-DRIVE SYSTEM SOLUTIONS FOR AGV

Branches & Partners

Lafert GmbH
Wolf-Hirth-Straße 10
71034 Böblingen
Germany
Phone +49 175 550 4526
lge.info@shi-g.com

Lafert Electric Motors Ltd.
Unit 17 Orion Way
Crewe, Cheshire CW1 6NG
United Kingdom
Phone +44 / (0) 1270 270 022
luk.info@shi-g.com

Lafert Moteurs S.A.S.
L'Isle d'Abeau Parc de Chesnes
75, rue de Malacombe
38070 St. Quentin-Fallavier
France
Phone +33 / 474 95 41 01
lfr.info@shi-g.com

Lafert Motores Electricos, S.L.U.
Polígono Pignatelli, Nave 27
50410 Cuarte de Huerva (Zaragoza)
Spain
Phone +34 / 976 503 822
les.info@shi-g.com

Lafert N.A. (North America)
5620 Kennedy Road - Mississauga
Ontario L4Z 2A9
Canada
Phone +1 / 800/661 6413 - 905/629 1939
lna.info@shi-g.com

Lafert Electric Motors (Australia)
Factory 3, 117-123 Abbott Road,
Hallam - VIC 3803
Australia
Phone +61 / (0)3 95 46 75 15
info@lafertaust.com.au

Lafert Singapore Pte Ltd
48 Hillview Terrace #06-06
Hillview Building - Singapore 669269
Phone +65 / 67630400 - 67620400
info@lafert.com.sg

Lafert (Suzhou) Co., Ltd.
No.3 Industrial Plant Building Yue Xi Phase 3,
Tian E Dang Lu 2011, 215104 Wuzong
Economic Development Zone, Suzhou
China
Phone +86 / 512 6687 0618
lsu.info@shi-g.com

LAFERTGROUP
Member of Sumitomo Drive Technologies

Lafert S.p.A.
J. F. Kennedy, 43
30027 San Donà di Piave (Venezia), Italy
Tel. +39 / 0421 229 611
lafert.info@shi-g.com

www.lafert.com

MKTG-10-260/24 dnaitalia.com